USER GUIDE

BLOCK GRAB



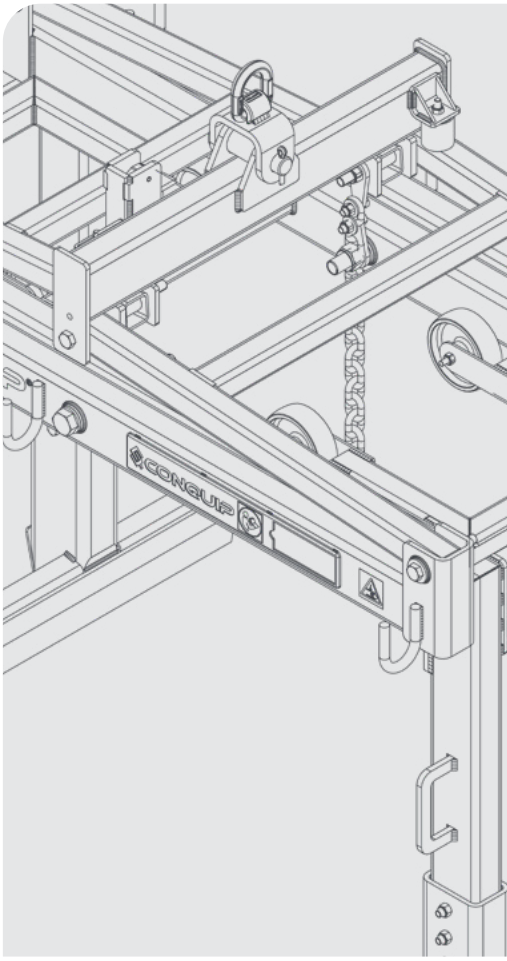

DISCLAIMER

Do not attempt to handle or operate this equipment before you have received sufficient training. Before use, operatives must have carried out all checks featured on the Visual Inspection Sheet on page 19. It is imperative that you have read the General Safety Instruction on page 20 and sufficiently familiarised yourself with the Operational Procedures in this document.

Note that this item is compliant only to the standards specified in this User Guide and it is therefore the duty of the responsible person(s) to review and ensure compliance.

CONTENTS

PRODUCT INFORMATION

INTRODUCTION 04
SPECIFICATION 05
GRIP RANGE 10
PARTS DIAGRAM 11

INTENDED USE

LIFTING AND CARRYING 15

USAGE

IMPORTANT USAGE NOTES 16
OPERATIONAL PROCEDURES 16
SETTING UP THE BLOCK GRAB 16
SETTING UP THE LOAD 17
OPERATIONAL USE 17

MAINTENANCE & INSPECTION

MAINTENANCE REGIME 18
VISUAL INSPECTION CHECKLIST 19

SAFETY

GENERAL SAFETY INSTRUCTION 20
GENERAL NOTES 21

LEGAL

TERMS AND CONDITIONS 23
EC DESIGN CONFORMITY 26
STANDARDS AND REGULATIONS APPLICABLE 27

INTRODUCTION

OVERVIEW

The Conquip Block Grab will provide the excavator operator with the lifting versatility they need. With its industry tested locking solution, the operator can engage and disengage the secure load without needing to exit the cab.

The workable width allows it to be used with a wide selection of concrete products, such as slabs, steel strapped bricks, blocks, kerb stones and paving stones.

Customers can choose between Block Grab variations featuring bar handles or D-shaped handles and Conquip also offer a Block Grab Forklift Adaptor, ensuring all variations are compatible with forklifts and telehandlers.

KEY BENEFITS

EFFICIENT
Robust locking mechanism enables a single operator to stack and unstack secure loads. Handles provide effective hand guiding for site operatives to position loads.

MODULAR DESIGN
Modular design of the D-Handles variation allows the operator to change between the 800 and 1000 variants with a minimal amount of tools, simply in minutes.

VERSATILE
Two designs available with a choice between bar handles or D-shaped handles.

SAFETY
Manufactured with hooks allowing it to accommodate a selection of safety restraint nets.

LONGEVITY
Bolt-on rubber mount assembly enables the operator to replace the components which are most susceptible to wear and damage, increasing the lifecycle of the unit.

SPECIFICATION

ITEM	CODE
Block Grab 800 - Bar Handles	CA105AH-00800
Block Grab 1000 - Bar Handles	CA105AH-01000
Block Grab 800 - D-Handles	CA105AI-00800
Block Grab 1000 - D-Handles	CA105AI-01000



TYPE	WEIGHT (kg)	WLL* (kg)
Block Grab 800 - Bar Handles	240	1800
Block Grab 1000 - Bar Handles	250	
Block Grab 800 - D-Handles	265	
Block Grab 1000 - D-Handles	288	

*Working Load Limit

SPECIFICATION

BLOCK GRAB 800

BAR HANDLES

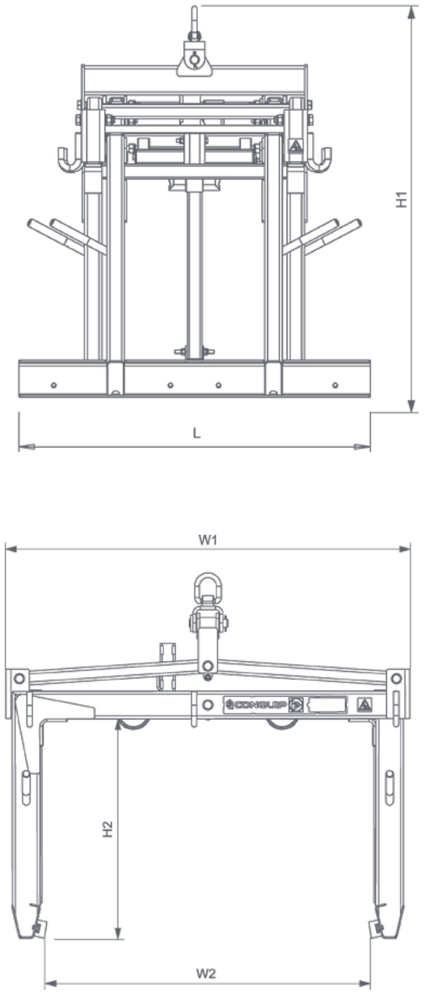

CODE	L	W1	W2	H1	H2
CA105AH-00800	1210	1480	1100	1340	850

SPECIFICATION

BLOCK GRAB 1000

BAR HANDLES

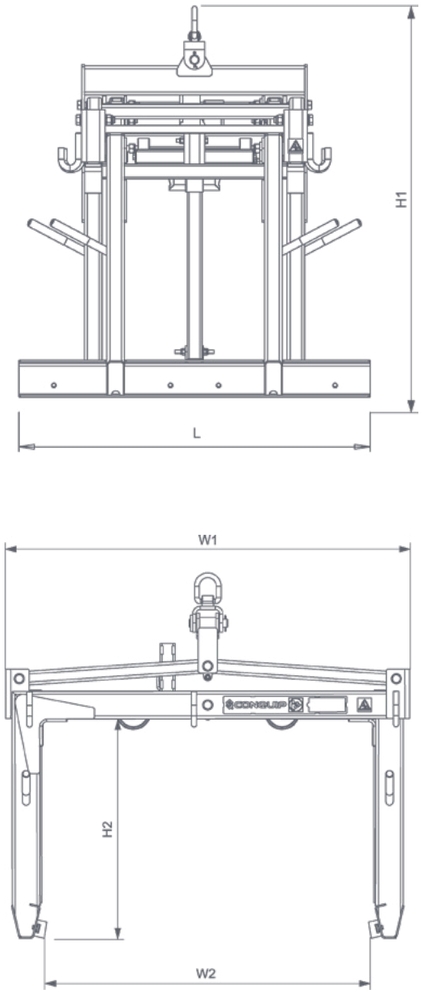

CODE	L	W1	W2	H1	H2
CA105AH-01000	1210	1480	1250	1540	1000

SPECIFICATION

BLOCK GRAB 800

D-HANDLES

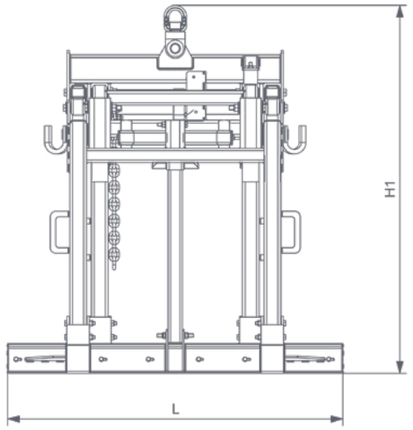

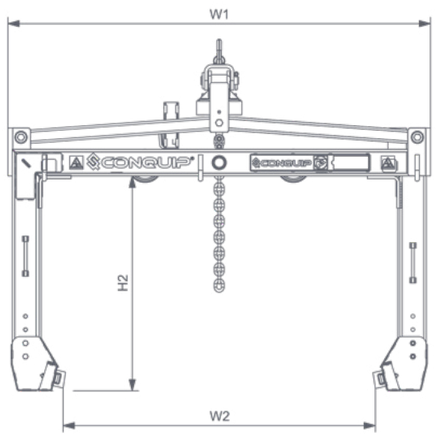

CODE	L	W1	W2	H1	H2
CA105AI-00800	1200	1582	1170	1315	800

SPECIFICATION

BLOCK GRAB 1000

D-HANDLES

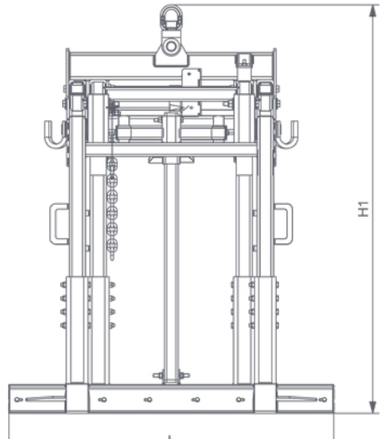

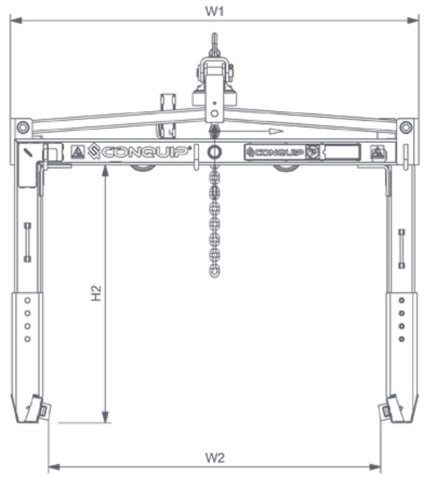

CODE	L	W1	W2	H1	H2
CA105AI-01000	1200	1582	1287	1511	1000

GRIP RANGE

BLOCK GRAB 800 & 1000

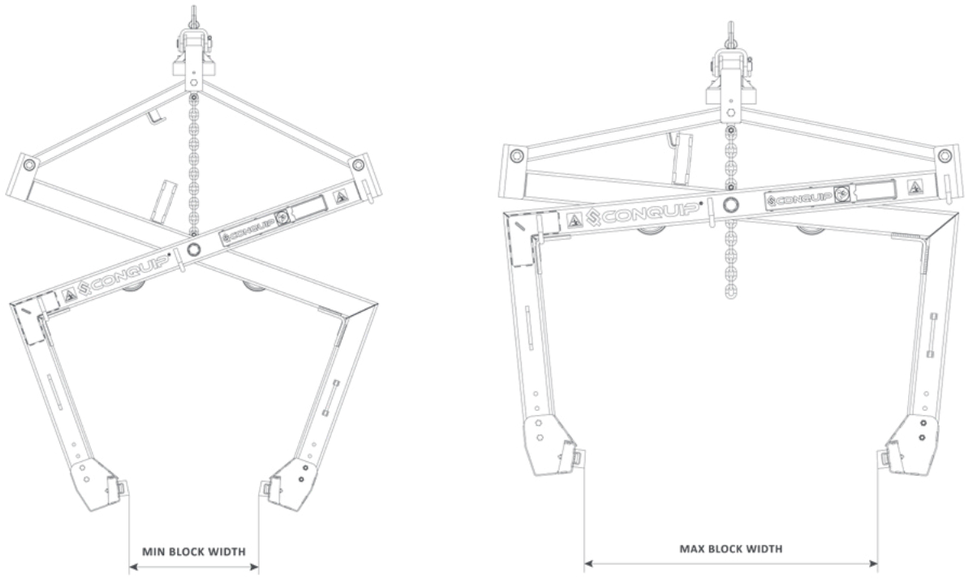

TYPE	MIN GRIP RANGE (mm)	MAX GRIP RANGE (mm)
Block Grab 800 - Bar Handles	400	1100
Block Grab 1000 - Bar Handles	600	1250
Block Grab 800 - D-Handles	600	1000
Block Grab 1000 - D-Handles	600	1000

PARTS DIAGRAM

BLOCK GRAB 800 & 1000

BAR HANDLES

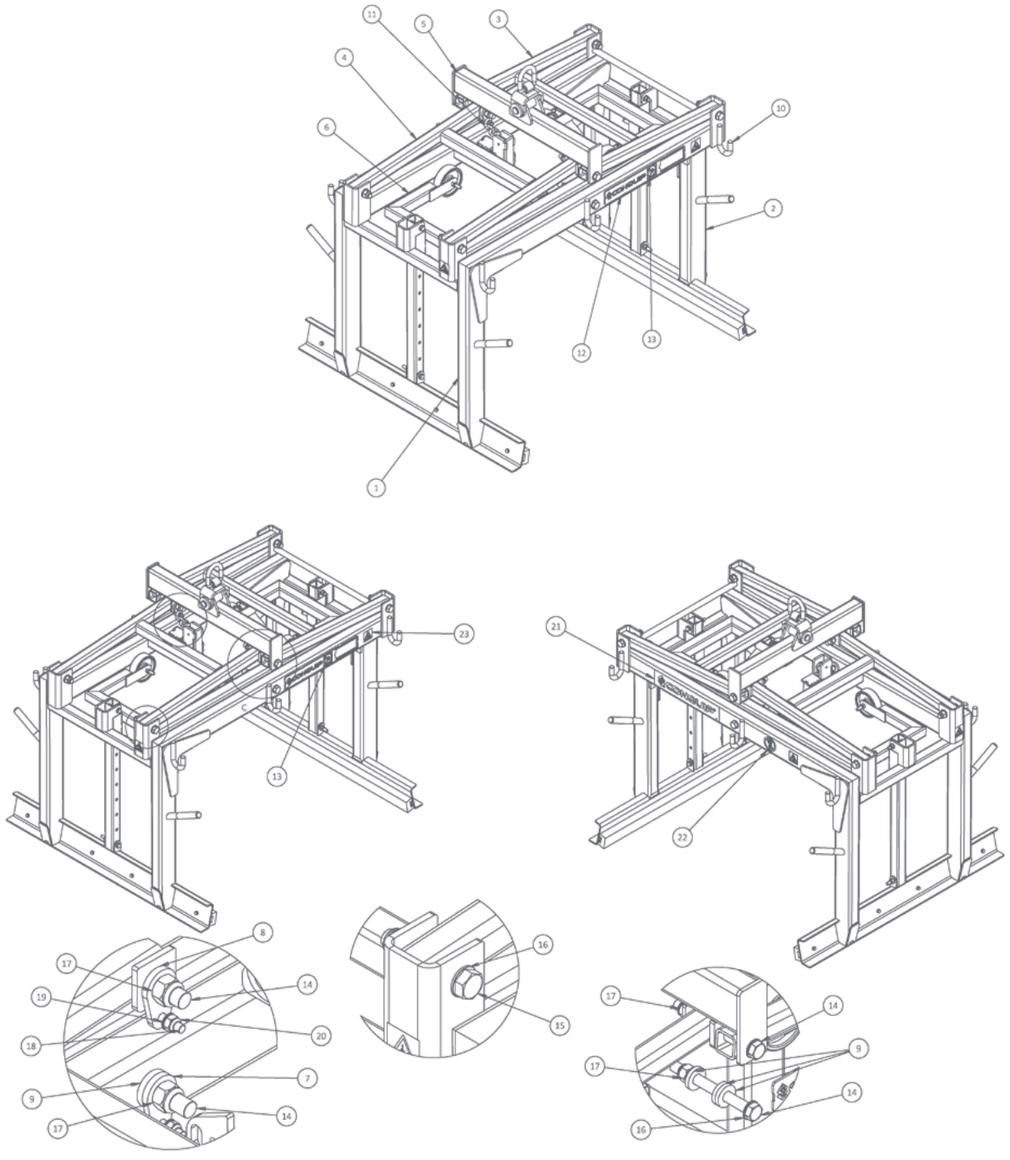

NOTE: These parts are for this model, they may differ for previous versions. Please contact Conquip with any queries.

PARTS DIAGRAM

BLOCK GRAB 800 & 1000

BAR HANDLES

ITEM NUMBER	DESCRIPTION	QUANTITY
01	Outer Frame Assembly	1
02	Inner Frame Assembly	1
03	Large H Frame Assembly	1
04	Small H Frame Assembly	1
05	Lifting Beam Assembly	1
06	Support Arm Assembly	2
07	Chain Bracket Bottom	1
08	Chain Bracket Top	1
09	Washer	6
10	Net Hook	6
11	10mm Chain Assembly, 600mm Length	1
12	CQ Name Plate	1
13	Read Working Instructions Sticker	1
14	M20x200 Hex Head Bolt 8.8	4
15	M20x120 Hex Head Bolt 8.8	4
16	M20 Flat Washer	12
17	M20 Nyloc Nut	8
18	M10x40 Hex Head Set Screw 8.8	2
19	M10 Flat Washer	2
20	M10 Nyloc Nut	2
21	CQ Logo Sticker	1
22	Crane Lifting Danger Sticker	1
23	Crush Point Sticker	4

NOTE: These parts are for this model, they may differ for previous versions. Please contact Conquip with any queries.

PRODUCT INFORMATION

PARTS DIAGRAM

BLOCK GRAB 800

D-HANDLES

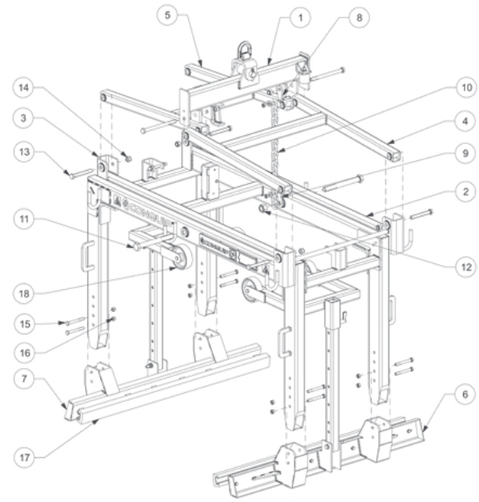

BLOCK GRAB 1000

D-HANDLES

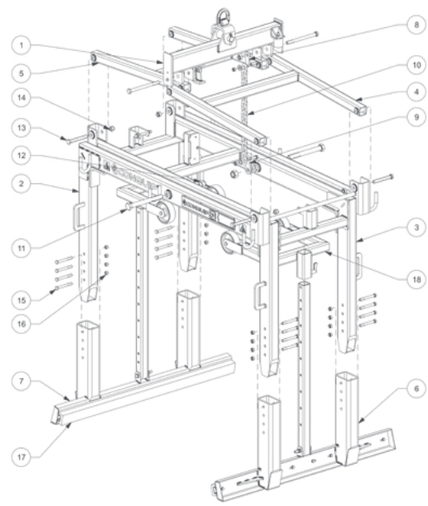

NOTE: These parts are for this model, they may differ for previous versions. Please contact Conquip with any queries.

PARTS LIST

BLOCK GRAB 800 & 1000

D-HANDLES

ITEM NUMBER	DESCRIPTION	QUANTITY	
		800	1000
01	Lifting Beam	1	1
02	Outer Frame	1	1
03	Inner Frame	1	1
04	Outer H Frame	1	1
05	Inner H Frame	1	1
06	C Section Assembly Right	1	1
07	C Section Assembly Left	1	1
08	Chain Bracket Top	1	1
09	Chain Bracket Bottom	1	1
10	Chain Sling	1	1
11	Hex Bolt M24x220	2	2
12	Nyloc Nut M24	2	2
13	Hex Bolt M16x120	6	4
14	Nyloc Nut M16	6	4
15	Hex Bolt M12x100	8	20
16	Nyloc Nut M12	12	22
17	Block Grab Rubber	2	2
18	Support Arm	2	2
19	Hex Screw M12x40	2	2

NOTE: These parts are for this model, they may differ for previous versions. Please contact Conquip with any queries.

INTENDED USE

LIFTING AND CARRYING

Excavators are primarily intended for the excavation and handling of loose materials and are not designed for lifting or suspending loads. The employment of excavators fitted with attachments for lifting operations, where such use is outside of standard earth-moving activities, must be properly planned, adequately supervised, and executed safely in strict compliance with Regulation 8 of the Lifting Operations and Lifting Equipment Regulations 1998 (LOLER), which requires that lifting equipment is used only for its intended purpose, inspected prior to use, and operated by competent personnel.

Furthermore, it is the responsibility of the end-user to ensure that the excavator complies with all applicable safety and design requirements, including:

- Machinery Directive 2006/42/EC, Clause 4.2.2 – requires machinery to be designed to eliminate risks during intended use and reasonably foreseeable misuse, ensuring structural integrity and operational safety when lifting attachments are employed.
- EN 474-1, Clause 4.12 – specifies requirements for stability, structural strength, and safety systems in earth-moving machinery. Compliance ensures that the excavator can safely accommodate lifting attachments without risk of overturning, structural failure, or loss of control.
- EN 474-5, Clause 4.8 – governs requirements for additional equipment and attachments, including lifting devices, ensuring mechanical compatibility, secure attachment, and safe operation within the machine's operational limits.
- Provision and Use of Work Equipment Regulations 1998 (PUWER), Regulation 4 – requires that work equipment, including attachments, is suitable for its intended task. This ensures that any lifting attachments are appropriately rated and safe for use with the excavator.
- BS 7121-1:2016 (Code of Practice for Safe Use of Cranes and Lifting Equipment), Parts on Mobile Plant Lifting – provides guidance on safe lifting practices using mobile machinery, including risk assessment, lifting planning, and operator competency, reinforcing compliance with LOLER.
- ISO 12100:2010 – Safety of Machinery: General Principles for Design – requires that machinery be designed to eliminate hazards or reduce risks to a minimum. For excavators, this ensures that any lifting operation does not compromise the original machine safety features.

End-users must verify that the excavator and any attachments are fully compliant with these provisions before undertaking any lifting operations, thereby ensuring regulatory compliance and the safety of personnel, equipment, and property.

OPERATIONAL PROCEDURES

IMPORTANT USAGE NOTES

- Before using this equipment, please ensure you read and understand the information outlined in the Safety section of this document.
- Ensure this product is compatible with your excavator lifting table before using. (Refer to the manufacturer's user guide.)
- If there is a slinger/signaller, they must not be positioned underneath the load and should remain visible to the driver.
- Operators should allow for any rough or sloping ground when assessing the method of operating. Any jerk or shock to the Block Grab may result in the secure load falling.
- Operators must not use the block grab for dragging loads; it should be used for lifting loads clear off the ground only.
- This equipment has various possible crush points therefore, all personnel should keep their extremities well clear.
- The overall envelope of the secure load must sit symmetrically within the Block Grab and not extend outside of the Block Grab frame by more than 100mm.
- Conquip advises that the Block Grab should always be used in conjunction with a Safety Restraint Net.
- Conquip advises that the load must never be lifted by more than 1 metre above the ground and operators must avoid lifting a load over an excavation.
- Conquip Engineering Group advises that, prior to a full lift, the operator should first complete a test lift to ensure the secure load is gripped correctly.
- **WARNING** ⚠
  Surface conditions of the secure load have a significant effect on the Working Load Limit of the Block Grab. It is the duty of the operator to ensure contact surfaces of the secure load and the Block Grab rubber assembly are free of ice, grease, plastic etc.

SETTING UP THE BLOCK GRAB

01. Review the Block Grab and ensure it is in its resting position with the jaws fully open.
02. Attach the lifting accessory (hook) to the Block Grab lifting point and secure it.
03. Position the contact wheels on both sides equally, to accommodate the height of the secure load and use the shoot bolt to lock the position.

SETTING UP THE LOAD

01. Conquip recommends securing the load which is to be lifted with a form of banding to minimise the chance of loose materials (e.g. bricks) falling.
02. Measure the overall envelope of the load to ensure it is compatible with your Block Grab model. See page 06 or 07 depending on the model you are using.

OPERATIONAL USE

01. Raise the Block Grab, position it centrally over the load using the D handles for assistance.
02. Lower it slowly until the wheels come into contact with the load and the locking mechanism is disengaged.

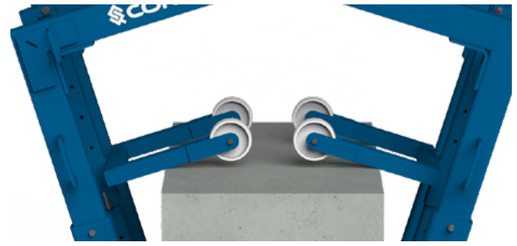

03. Raise the Block Grab slowly just above the ground to ensure the load is balanced and secured.
04. Conquip advises that at this point, the responsible person(s) attaches a Safety Restraint Net to the hooks positioned on either side of the unit's framework.



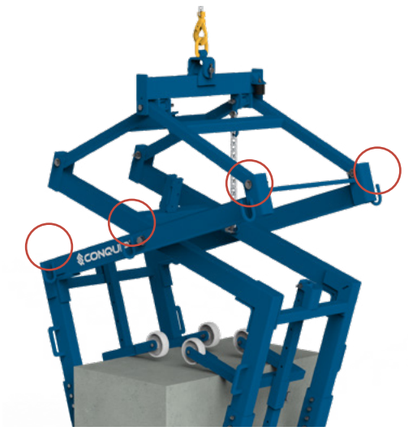

05. Once you have confirmed that the load is secured, proceed to move the load to its required position.
06. When in position, slowly lower the Block Grab, using the D handles to assist if required, until the lock mechanism engages.
07. Once the load is resting on the ground securely, slowly raise the Block Grab clear from the load.
08. The operator can now proceed to the next load.

MAINTENANCE & INSPECTION

MAINTENANCE REGIME

- It is mandatory that the equipment is thoroughly examined regularly, by a qualified engineer, to ensure compliance with relevant regulations. Conquip recommend carrying out a thorough examination every six months.
- This equipment may incorporate various loose and detachable items including, but not limited to pins, bolt assemblies and adaption plates. Refer to the separate requirements for the safe use of those items.
- When not being used, store the unit in a clean, upright condition and in a safe place where it will be protected from thieves and unauthorised users.
- This equipment must be inspected by the responsible person before each use and then regularly, as determined by your risk assessment or working practice. If you have any concerns about the machinery's condition or suitability, do not use it.

SAFETY DECALS

These are the safety decals featured on the equipment. When carrying out the visual inspection of the machinery, please ensure all decals are present before checking this item off the list.



VISUAL INSPECTION CHECKLIST

INSPECTION ITEMS	RESULTS		COMMENTS
	SATISFACTORY	UNSATISFACTORY	
Serial Number			CQ.....
Product Code			
Working Load Limit (kg)			
Conforms to user guide specification			
Check catch mechanism operation			
Check condition of net attachment hooks			
Check safety chain unbroken			
Check lift point condition and lift pin secure			
Check bar handles for damage or bends and their rubber grips for wear (if applicable)			
Check D-handles for damage or bends (if applicable)			
Check operation of height adjuster catches and wheels			
Check rubber on C sections for damage or wear			
General visual inspection of the framework's condition			
SIGNATURE			
Name	Position	Qualification	Signature & Date

GENERAL SAFETY INSTRUCTION

The machinery should be properly operated and maintained to keep it in a safe, efficient operating condition. Be sure that all fixings and components are free of mud or other matter that might cause issues hazardous to the operator, serviceman, or other personnel or equipment. Report all malfunctions to those responsible for maintenance, and do not operate the equipment until corrected. Normal service or maintenance performed as required can prevent unexpected and unnecessary downtime.

This operations manual describes general inspections, servicing and operation with the normal safety precautions required for normal servicing and operating conditions. It is not a guide, however, for abnormal conditions or situations, and therefore, servicemen and operators must be safety conscious and alert to recognise potential servicing or operating safety hazards at all times, and take necessary precautions to assure safe servicing and operation of the machine.



M002
Refer to instructions manual



M004
Wear eye protection



M008
Wear safety footwear



M009
Wear protective gloves



M010
Wear protective clothing



M014
Wear head protection



M015
Wear high-visibility clothing

GENERAL NOTES

- Read this operations manual and learn the operating characteristics and limitations of the machinery. Know what operating clearances the machine requires.
- Read and understand all the safety signs prior to operation.
- If the safety signs are obstructed by dirt or debris, clean them using mild soap and water prior to operation.
- If the safety signs are damaged or illegible, replace them immediately, prior to operation.
- Be aware of operating hazards that weather changes can create on the job. Know proper procedures to follow when a severe rain or electrical storm strikes.
- Never attempt to operate or work on machinery when not feeling physically fit.
- Never wear loose clothing, rings, watches, heavy gloves etc., that might catch and result in injury.
- Know what safety equipment is required and use it. Such equipment may be: hard hat, safety glasses, reflector type vests, protective gloves and safety footwear.

TERMS & CONDITIONS

CONQUIP ENGINEERING GROUP STANDARD PRODUCT WARRANTY

01. COMMENCEMENT

1.1 This Warranty shall commence on the Commencement Date and shall continue until the earlier of:

(a) the Expiry Date; or

(b) the date on which it may be voided in accordance with clause 4.1(b)

when it shall terminate automatically without notice.

02. DUTY OF GOOD FAITH

2.1 The Purchaser shall in the exercise of its rights under this Warranty and in the compliance with its obligations under this Warranty be subject to and shall in all respects owe and comply with a duty of good faith to the Warrantor.

03. NATURE AND EXTENT OF COVER

3.1 Subject to clause 3.2 the Warrantor agrees and undertakes to the Purchaser that it shall be liable to the Purchaser under and in accordance with the terms of this Warranty in the event that:

(a) prior to the Expiry Date the Purchaser shall notify a Warranty Claim to the Warrantor; and

(b) the Equipment or any relevant part of the Equipment shall have become unusable as the result of defective material or defective workmanship prior to the Expiry Date.

3.2 The Warrantor's obligation under clause 3.1 shall be expressly subject to the provisions of clauses 4, 5 and 6 and conditional upon the Purchaser's compliance in full with the provisions of clause 7.

04. RESTRICTIONS

4.1 The following restrictions apply to this Warranty:

(a) This Warranty is personal to the Purchaser and neither the legal benefit nor legal burden of this warranty may be assigned or novated or otherwise transferred by the

Purchaser to any other party. Any purported assignment, novation or transfer shall not be binding upon the Warrantor.

(b) This Warranty shall be void in the event that the Purchaser:

(i) cannot provide authentic and original documentary evidence that the Purchaser has during the period between the Commencement Date and the Expiry Date complied with the Maintenance and Servicing Requirements; and/or

(ii) has, during the period between the Commencement Date and the Expiry Date, exceeded the Purchaser's Usage Cycle Parameters; and/or

(iii) has, during the period between the Commencement Date and the Expiry Date, exceeded the Purchaser's Use Parameters; and/or

(iv) has carried out, or procured the carrying out by any third party of, any repair to the Equipment or any part of the Equipment which is not an Authorised Repair; and/or

(v) has operated the Equipment after having replaced any part of the Equipment with a part which has not been supplied and fitted by the Warrantor; and/or

(vi) has modified the Equipment in any way prior to use.

05. EXCLUSIONS

5.1 The following are excluded from the scope of this Warranty:

(a) Loss of and/ or damage to the Equipment or any part of it resulting from any collision between the Equipment and any other fixed or stationary or mobile object whatsoever, irrespective of whether that collision was or was not caused by the Purchaser; and/or

(b) Loss of and/or damage to any personal property and/or possessions or other equipment not forming part of the Equipment but which is present in or about the Equipment; and/or

(c) loss and/or damage which is covered by any other insurance policy taken out and maintained by the Purchaser or in respect of which the Purchaser has a contractual obligation to do so; and/or

(d) loss and/or damage to the equipment which is consistent with the use by the Purchaser of the Equipment:

(i) in compliance with the Maintenance and Servicing Requirements; and

(ii) in compliance with the Usage Cycle Parameters; and

(iii) in compliance with the Use Parameters; and

(iv) having only carried out Authorised Repairs to the Equipment; and

(v) having all and any replacement parts fitted by the Warrantor; and

(vi) in unmodified form.

06. LIMITATION OF LIABILITY

6.1 The Warrantor's liability to the Purchaser shall be limited as follows:

(a) The Warrantor shall not in any circumstances be liable to the Purchaser for indirect and/or consequential and/or economic loss suffered and/or incurred as the case may be by the Purchaser; and

(b) The Warrantor shall only be liable to the Purchaser for the reasonable and proper costs reasonably and properly incurred by the Purchaser directly in connection with the repair and/or replacement (at the Warrantor's absolute discretion) of the Equipment or any part of the Equipment; and

(c) The Warrantor's liability to the Purchaser shall notwithstanding any other provision of this Warranty, not in any circumstances exceed the Purchase Price of the Equipment.

07. WARRANTY CLAIMS

7.1 The Purchaser shall in respect of any claim against the Warrantor under this Warranty and within 24 hours of the occurrence of the subject matter of the Warranty Claim:

(a) Complete in full and submit to the Warrantor a Warranty Claim in the form annexed to Schedule 4;

(b) Provide date stamped or date identifiable photographs evidencing the claim; and

(c) Make the Equipment or the relevant part of the Equipment available to the Warrantor for inspection within 48 hours of notification of the relevant Warranty Claim.

08. ENTIRE AGREEMENT

8.1 This Warranty constitutes the entire agreement between the parties and supersedes and extinguishes all previous promises, assurances, warranties, representations and understandings between them, whether written or oral, relating to its subject matter.

8.2 Each party agrees that it shall have no remedies in respect of any statement, representation, assurance or warranty (whether made innocently or negligently) that is not set out in this Warranty. Each party agrees that it shall have no claim for innocent or negligent misrepresentation or negligent misstatement based on any statement in this Warranty.

No variation of this Warranty shall be effective unless it is in writing and signed by the parties (or their authorised representatives).

09. WAIVER

No failure or delay by a party to exercise any right or remedy provided under this Warranty or by law shall constitute a waiver of that or any other right or remedy, nor shall it prevent or restrict the further exercise of that or any other right or remedy. No single or partial exercise of such right or remedy shall prevent or restrict the further exercise of that or any other right or remedy.

10. SEVERANCE

10.1 If any provision or part-provision of this Warranty is or becomes invalid, illegal or unenforceable, it shall be deemed deleted, but that shall not affect the validity and enforceability of the rest of this Warranty.

10.2 If any provision or part-provision of this Warranty is deemed deleted under clause 10.1 the parties shall negotiate in good faith to agree a replacement provision that, to the greatest extent possible, achieves the intended commercial result of the original provision.

11. THIRD PARTY RIGHTS

11.1 This Warranty does not give rise to any rights under the Contracts (Rights of Third Parties) Act 1999 to enforce any term of this Warranty.

12. GOVERNING LAW

12.1 This Warranty and any dispute or claim (including non-contractual disputes or claims) arising out of or in connection with it or its subject matter or formation shall be governed by and construed in accordance with the law of England and Wales.

13. JURISDICTION

13.1 Each party irrevocably agrees that the courts of England and Wales shall have exclusive jurisdiction to settle any dispute or claim (including non-contractual disputes or claims) arising out of or in connection with this Warranty or its subject matter or formation.

DESIGN CONFORMITY (EC & UK)

(01) This certificate meets the requirements of the Machinery Directive 2023/42/EC of the European Parliament and Council.

(02) This certificate meets the requirements of the Supply of Machinery (Safety) Regulations 2008.

DETAILS

NAME & ADDRESS OF MANUFACTURER:
Conquip Engineering Group Ltd, Unit 4, Waterbrook Estate, Alton, Hampshire. GU34 2UD

NAME & ADDRESS OF PERSON TO COMPILE TECHNICAL FILE:
Name: Daniel Critchley Address: Conquip Engineering Group, Unit 4, Waterbrook Estate, Alton, Hampshire. GU34 2UD

NAME & ADDRESS OF AUTHORISED REPRESENTATIVE IF ONE HAS BEEN MANDATED BY THE MANUFACTURER:
N/A

NAME, ADDRESS, AND IDENTIFICATION NUMBER OF THE NOTIFIED BODY (01) OR APPROVED BODY (02), WHERE APPLICABLE:
N/A

EQUIPMENT DESCRIPTION

PRODUCT CODES	GENERAL DESCRIPTION / DESIGNATION	WORKING LOAD LIMIT
CA105AH-00800	Block Grab 800 - Bar Handles	1800kg
CA105AH-01000	Block Grab 1000 - Bar Handles	
CA105AI-00800	Block Grab 800 - D-Handles	
CA105AI-01000	Block Grab 1000 - D-Handles	

HARMONISED STANDARDS & REGULATIONS

ITEM	CODE	DESCRIPTION
EC DIRECTIVE/ REGULATION	2023/42/EC	Directive 2023/42/EC- new machinery directive
HARMONISED STANDARDS	BS EN ISO 12100:2010	Safety of machinery General principles for design Risk assessment and risk reduction
OTHER REGULATIONS	LOLER 1998	Lifting Operations and Lifting Equipment Regulations 1998 (LOLER)
	PUWER 1998	Provision and Use of Work Equipment Regulations 1998 (PUWER)

DECLARATION

PLACE OF DECLARATION:
Alton

DATE OF DECLARATION:
August 2026

I declare that the above equipment meets the Essential Health and Safety requirements of the

(01) Machinery Directive 2023/42/EC of the European Parliament and Council.

(02) Supply of Machinery (Safety) Regulations 2008 and Section 6 of the Health and Safety at Work Etc. Act 1974.

NAME:	POSITION:	SIGNATURE:
Daniel Critchley	Chief Executive Officer	

TALKING TO US IS EASY

WE'RE HERE TO HELP

Call us on 0333 300 3470
Email us at sales@cqegroup.com
www.cqegroup.com

Copyright © 2026 Conquip Engineering Group. All Rights Reserved.
Block Grab User Guide- Issue 09