USER GUIDE

FUEL BOWSER

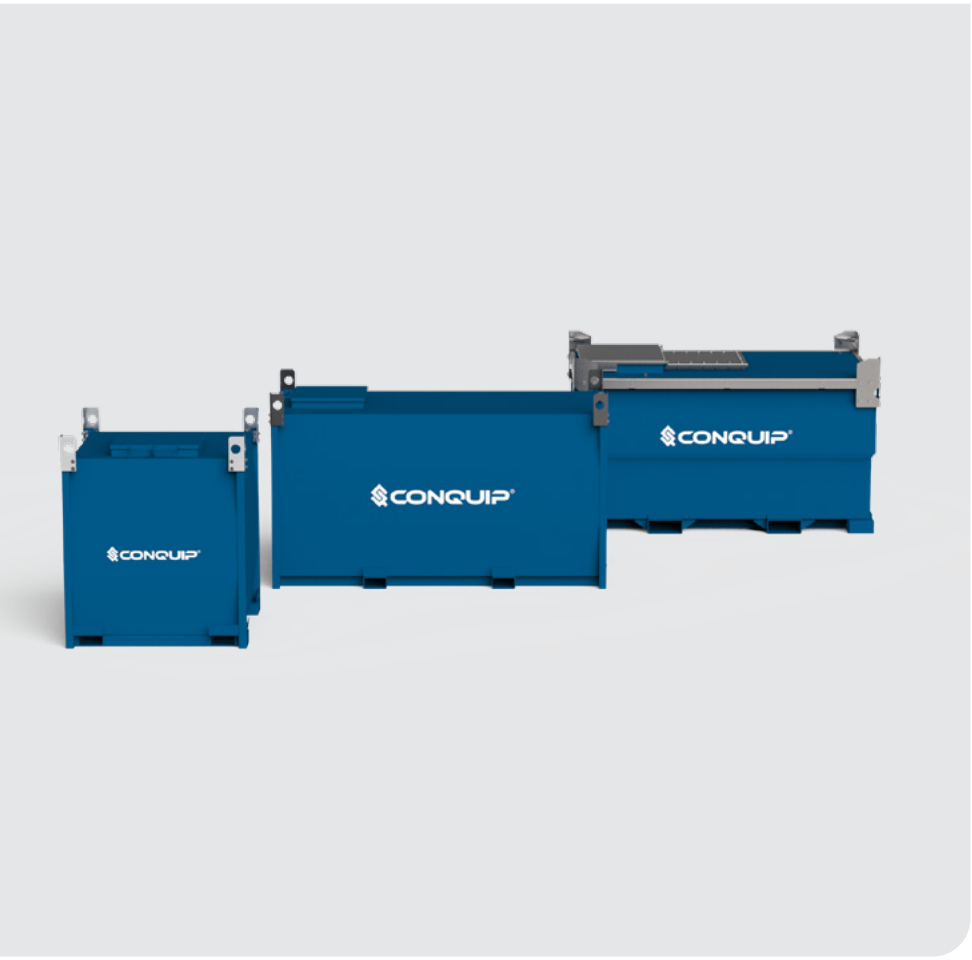

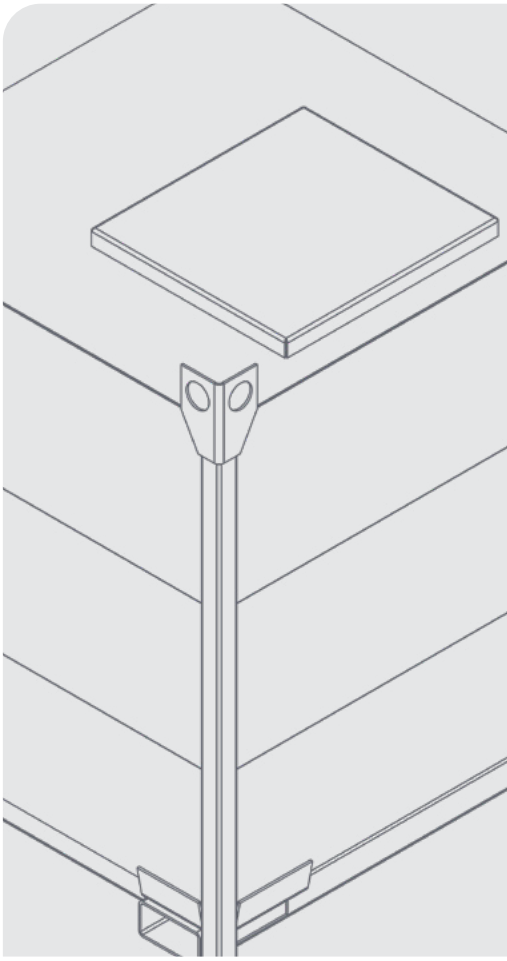

DISCLAIMER

Do not attempt to handle or operate this equipment before you have received sufficient training. Before use, operatives must have carried out all checks featured on the Visual Inspection Sheet on page 11. It is imperative that you have read the General Safety Instructions on page 12 and sufficiently familiarised yourself with the Operational Procedures in this document.

Note that this item is compliant only to the standards specified in this User Guide and it is therefore the duty of the responsible person(s) to review and ensure compliance.

CONTENTS

PRODUCT INFORMATION

INTRODUCTION 04
SPECIFICATION 05
PARTS DIAGRAM 08

OPERATIONAL PROCEDURES

IMPORTANT USAGE NOTES 09
LIFTING WITH A FORKLIFT 09
LIFTING WITH A CRANE 09
FILLING AND REFUELLING 09

MAINTENANCE & INSPECTION

MAINTENANCE REGIME 10
VISUAL INSPECTION SHEET 11

GENERAL SAFETY INSTRUCTIONS

SAFETY INSTRUCTIONS 12
GENERAL NOTES 13

LEGAL

TERMS AND CONDITIONS 14
EC DESIGN CONFORMITY 18
STANDARDS AND REGULATIONS APPLICABLE 19

INTRODUCTION

OVERVIEW

The Conquip Fuel Bowser is a fully bunded, durable and ergonomic tank for storing fuel and refuelling machinery on-site, reducing fuel delivery waiting times.

Our range is available in 880-litre, 2000-litre and 3000-litre sizes, with a choice of a hand or electric pump to suit varying site requirements. The 3000-litre tank can be retrofitted with a solar panel and an electric pump, upgrading it to a Smart Fuel Tank capable of preventing unauthorised usage and offering fuel monitoring capabilities.

The 880-litre (nominal)/836 litres (95%) can be transported with fuel while remaining ADR compliant. Please refer to the ADR Regulations for further detail.

KEY BENEFITS

- Crane-lifting points and four-way fork pockets allow units to be easily moved around site, and loaded or unloaded from delivery vehicles.
- 110% double walled tank eliminates drip tray requirement.
- Complete with corner lugs for safe and simple stacking.
- The 880-litre tank is ADR approved for transportation when full.
- All tanks are fitted with a hand pump as standard but electric pump options are available on request.
- 3000-litre tank can be upgraded with smart features that enable off-grid usage and fuel monitoring capabilities.
- Additional feed/return ports for maximum utilisation, all housed within the secure, lockable access hatch.
- Dipstick or fuel gauge for measuring quantity of fuel in tank.

SPECIFICATION

THE RANGE

ITEM	PRODUCT CODE
Small Fuel Bowser 880	FB602-00950
Medium Fuel Bowser 2000	FB602-02000
Large Fuel Bowser 3000	FB608-03000



SIZE	PUMP TYPE	WEIGHT¹ (kg)	WEIGHT² (kg)	CAPACITY (litres)
Small 880	Hand / Electric	360	1200	880
Medium 2000	Hand / Electric	700	2600	2000
Large 3000	Hand / Electric	1100	3930	3000

¹Weight when unit empty | ²Weight when unit full

SPECIFICATION

FUEL BOWSER

ITEM	PRODUCT CODE
Small Fuel Bowser 880	FB602-00950
Medium Fuel Bowser 2000	FB602-02000
Large Fuel Bowser 3000	FB608-03000

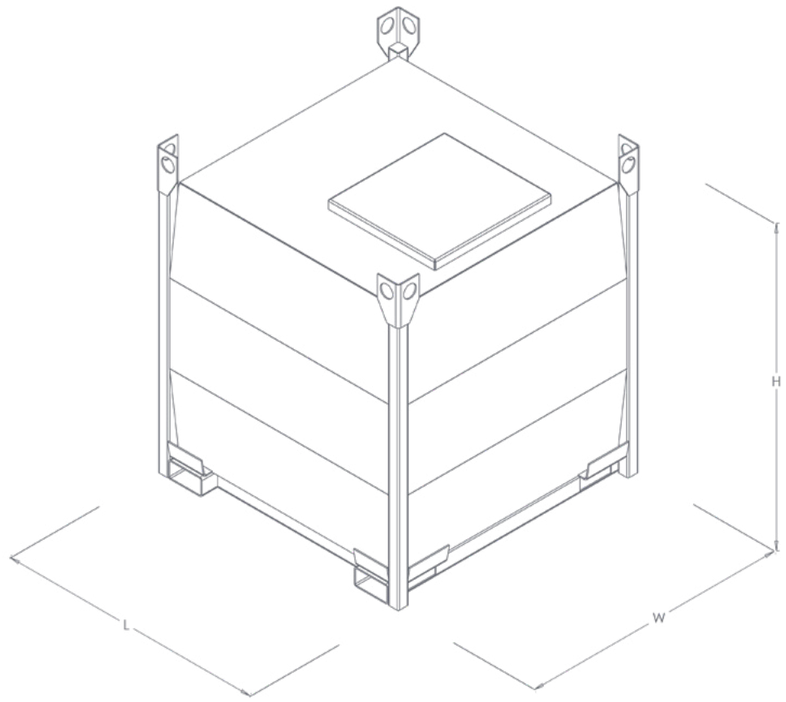

CODE	PUMP TYPE	LENGTH (mm)	WIDTH (mm)	HEIGHT (mm)
FB602-00950	Hand / Electric	1150	1250	1320
FB602-02000	Hand / Electric	2300	1120	1025
FB608-03000	Hand / Electric	2300	1550	1320

SPECIFICATION

ELECTRIC PUMP

ITEM	PRODUCT CODE
Electric Pump	ZZ260121

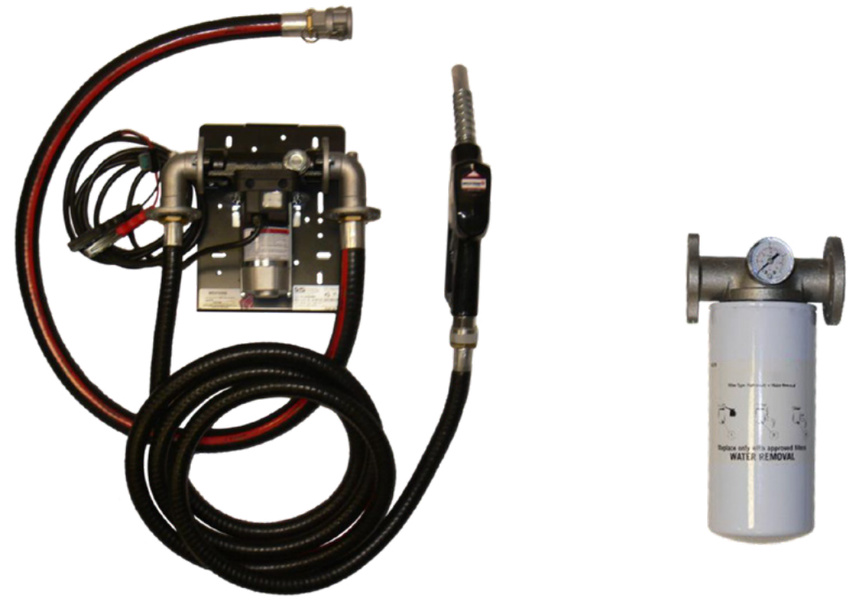

DETAIL	SPECIFICATION
Pump	Vane Pump, c/w by-pass
Motor / Engine	12v motor, c/w on/off Switch
Power / Fuel	12V / 336W, 4m of cable, c/w battery clips
Flow Rate	58 Lpm
Hose	Heavy duty 3/4” Vaccupress hose
Nozzle	60 Lpm Automatic shut off nozzle
Filter	10 micron water/particulate removal

PARTS DIAGRAM

FUEL BOWSER

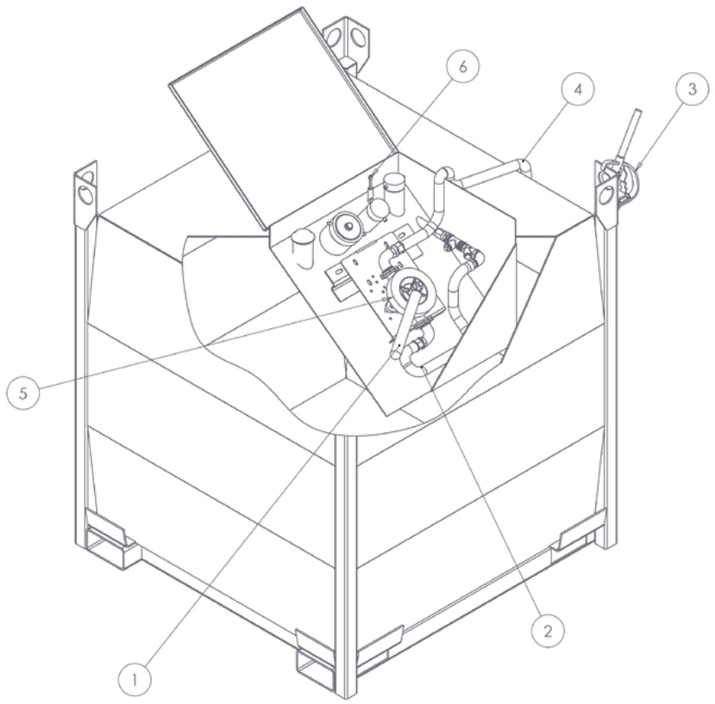

ITEM NUMBER	DESCRIPTION	QUANTITY
1	K2 Hand Pump, Wooden Handle	1
2	Suction Hose 3/4in Bore	1
3	Delivery Trigger Nozzle	1
4	Delivery Hose 4m 3/4in Bore	1
5	K2 Hand Pump	1
6	Dip Stick	1

NOTE: These parts are for this model, they may differ for previous versions. Please contact Conquip with any queries.

OPERATIONAL PROCEDURES

IMPORTANT USAGE NOTES

- The Fuel Bowser is designed to store fuel, it should not be used to store other harmful chemicals or equipment and materials.
- It is the responsibility of the supervisor that no fuel is removed by unauthorised users.
- The 880-litre (nominal)/836 litres (95%) can be transported with fuel while remaining ADR compliant but the 2000-litre (nominal)/1900 litres (95%) and 3000-litre (nominal)/2831 litres tanks cannot be transported full. Please refer to the ADR Regulations for further detail.

LIFTING WITH A FORKLIFT

01. To lift the Fuel Bowser with a forklift, set the machine's forks to the correct width for the Fuel Bowser's fork pockets. Make sure that they are equidistant from the centre.
02. Drive the telehandler to the Fuel Bowser, aligning the forks with the fork pockets. Move the telehandler forward until the forks are fully inserted into the fork pockets. The bowser is now ready to move.
03. Carefully raise the bowser just off the ground to check for balance and security. Then transport it to the required destination, taking care not to jolt the load.
04. When in position, the bowser can be lowered onto flat, firm, level ground.
05. Reverse the forklift back and clear of the bowser.

LIFTING WITH A CRANE

01. Attach the lifting apparatus hook to the Fuel Bowser's lifting points, using a certified four-leg lifting chain.
02. Check that personnel are clear from the immediate area and the intended location to allow for the bowser swinging when lifting off the ground.
03. Raise the bowser just off the ground and check for balance and security. Then, carefully transport the bowser to its required destination, taking care not to jolt the load.
04. When in position, the bowser can be lowered onto flat, firm, level ground.

FILLING AND REFUELLING

01. If not already full, the bowser can now be filled with fuel through the fill port in the access hatch at the top.
02. To refuel equipment and machinery, use the hand pump inside the access hatch at the top of the bowser to fill as required, taking care not to spill any fuel.

MAINTENANCE & INSPECTION

MAINTENANCE REGIME

- It is mandatory that the equipment is thoroughly examined regularly, by a qualified engineer, to ensure compliance with relevant regulations. Conquip recommend carrying out a thorough examination every six months.
- This equipment may incorporate various loose and detachable items including, but not limited to pins, bolt assemblies and adaption plates. Refer to the separate requirements for the safe use of those items.
- When not being used, store the unit in a clean, upright condition and in a safe place where it will be protected from thieves and unauthorised users.
- This equipment must be inspected by the responsible person before each use and then regularly, as determined by your risk assessment or working practice. If you have any concerns about the equipment's condition or suitability, do not use it.

VISUAL INSPECTION CHECKLIST

INSPECTION ITEMS	RESULTS		COMMENTS
	SATISFACTORY	UNSATISFACTORY	
Serial Number			CQ.....
Product Code			
Working Load Limit (kg)			
Conforms to user guide specification			
Check operation of ball valves			
Check under access hatch for any water or fuel spillage			
Check operation of nozzle trigger			
Check lifting points condition			
General visual inspection of the body			
SIGNATURE			
Name	Position	Qualification	Signature & Date

GENERAL SAFETY INSTRUCTIONS

The equipment should be properly operated and maintained to keep it in a safe, efficient operating condition. Be sure that all fixings and components are free of mud or other matter that might cause issues hazardous to the operator, serviceman, or other personnel or equipment. Report all malfunctions to those responsible for maintenance, and do not operate the equipment until corrected. Normal service or maintenance performed as required can prevent unexpected and unnecessary downtime.

This operations manual describes general inspections, servicing and operation with the normal safety precautions required for normal servicing and operating conditions. It is not a guide, however, for abnormal conditions or situations, and therefore, servicemen and operators must be safety conscious and alert to recognise potential servicing or operating safety hazards at all times, and take necessary precautions to assure safe servicing and operation of the equipment.



M002
Refer to instructions manual



M004
Wear eye protection



M008
Wear safety footwear



M009
Wear protective gloves



M010
Wear protective clothing



M014
Wear head protection



M015
Wear high-visibility clothing

GENERAL NOTES

- Read this operations manual and learn the operating characteristics and limitations of the equipment. Know what operating clearances the machine requires.
- Read and understand all the safety signs prior to operation.
- If the safety signs are obstructed by dirt or debris, clean them using mild soap and water prior to operation.
- If the safety signs are damaged or illegible, replace them immediately, prior to operation.
- Be aware of operating hazards that weather changes can create on the job. Know proper procedures to follow when a severe rain or electrical storm strikes.
- Never attempt to operate or work on machinery when not feeling physically fit.
- Never wear loose clothing, rings, watches, heavy gloves etc., that might catch and result in injury.
- Know what safety equipment is required and use it. Such equipment may be: hard hat, safety glasses, reflector type vests, protective gloves and safety footwear.

TERMS & CONDITIONS

CONQUIP ENGINEERING GROUP STANDARD PRODUCT WARRANTY

01. COMMENCEMENT

1.1 This Warranty shall commence on the Commencement Date and shall continue until the earlier of:

(a) the Expiry Date; or

(b) the date on which it may be voided in accordance with clause 4.1(b)

when it shall terminate automatically without notice.

02. DUTY OF GOOD FAITH

2.1 The Purchaser shall in the exercise of its rights under this Warranty and in the compliance with its obligations under this Warranty be subject to and shall in all respects owe and comply with a duty of good faith to the Warrantor.

03. NATURE AND EXTENT OF COVER

3.1 Subject to clause 3.2 the Warrantor agrees and undertakes to the Purchaser that it shall be liable to the Purchaser under and in accordance with the terms of this Warranty in the event that:

(a) prior to the Expiry Date the Purchaser shall notify a Warranty Claim to the Warrantor; and

(b) the Equipment or any relevant part of the Equipment shall have become unusable as the result of defective material or defective workmanship prior to the Expiry Date.

3.2 The Warrantor's obligation under clause 3.1 shall be expressly subject to the provisions of clauses 4, 5 and 6 and conditional upon the Purchaser's compliance in full with the provisions of clause 7.

04. RESTRICTIONS

4.1 The following restrictions apply to this Warranty:

(a) This Warranty is personal to the Purchaser and neither the legal benefit nor legal burden of this warranty may be assigned or novated or otherwise transferred by the Purchaser to any other party. Any purported assignment, novation or transfer shall not be binding upon the Warrantor.

(b) This Warranty shall be void in the event that the Purchaser:

(i) cannot provide authentic and original documentary evidence that the Purchaser has during the period between the Commencement Date and the Expiry Date complied with the Maintenance and Servicing Requirements; and/or

(ii) has, during the period between the Commencement Date and the Expiry Date, exceeded the Purchaser's Usage Cycle Parameters; and/or

(iii) has, during the period between the Commencement Date and the Expiry Date, exceeded the Purchaser's Use Parameters; and/or

(iv) has carried out, or procured the carrying out by any third party of, any repair to the Equipment or any part of the Equipment which is not an Authorised Repair; and/or

(v) has operated the Equipment after having replaced any part of the Equipment with a part which has not been supplied and fitted by the Warrantor; and/or

(vi) has modified the Equipment in any way prior to use.

05. EXCLUSIONS

5.1 The following are excluded from the scope of this Warranty:

(a) Loss of and/ or damage to the Equipment or any part of it resulting from any collision between the Equipment and any other fixed or stationary or mobile object whatsoever, irrespective of whether that collision was or was not caused by the Purchaser; and/or

(b) Loss of and/or damage to any personal property and/or possessions or other equipment not forming part of the Equipment but which is present in or about the Equipment; and/or

(c) loss and/or damage which is covered by any other insurance policy taken out and maintained by the Purchaser or in respect of which the Purchaser has a contractual obligation to do so; and/or

(d) loss and/or damage to the equipment which is consistent with the use by the Purchaser of the Equipment:

(i) in compliance with the Maintenance and Servicing Requirements; and

(ii) in compliance with the Usage Cycle Parameters; and

(iii) in compliance with the Use Parameters; and

(iv) having only carried out Authorised Repairs to the Equipment; and

(v) having all and any replacement parts fitted by the Warrantor; and

(vi) in unmodified form.

06. LIMITATION OF LIABILITY

6.1 The Warrantor's liability to the Purchaser shall be limited as follows:

(a) The Warrantor shall not in any circumstances be liable to the Purchaser for indirect and/or consequential and/or economic loss suffered and/or incurred as the case may be by the Purchaser; and

(b) The Warrantor shall only be liable to the Purchaser for the reasonable and proper costs reasonably and properly incurred by the Purchaser directly in connection with the repair and/or replacement (at the Warrantor's absolute discretion) of the Equipment or any part of the Equipment; and

(c) The Warrantor's liability to the Purchaser shall notwithstanding any other provision of this Warranty, not in any circumstances exceed the Purchase Price of the Equipment.

07. WARRANTY CLAIMS

7.1 The Purchaser shall in respect of any claim against the Warrantor under this Warranty and within 24 hours of the occurrence of the subject matter of the Warranty Claim:

(a) Complete in full and submit to the Warrantor a Warranty Claim in the form annexed to Schedule 4;

(b) Provide date stamped or date identifiable photographs evidencing the claim; and

(c) Make the Equipment or the relevant part of the Equipment available to the Warrantor for inspection within 48 hours of notification of the relevant Warranty Claim.

08. ENTIRE AGREEMENT

8.1 This Warranty constitutes the entire agreement between the parties and supersedes and extinguishes all previous promises, assurances, warranties, representations and understandings between them, whether written or oral, relating to its subject matter.

8.2 Each party agrees that it shall have no remedies in respect of any statement, representation, assurance or warranty (whether made innocently or negligently) that is not set out in this Warranty. Each party agrees that it shall have no claim for innocent or negligent misrepresentation or negligent misstatement based on any statement in this Warranty.

No variation of this Warranty shall be effective unless it is in writing and signed by the parties (or their authorised representatives).

09. WAIVER

No failure or delay by a party to exercise any right or remedy provided under this Warranty or by law shall constitute a waiver of that or any other right or remedy, nor shall it prevent or restrict the further exercise of that or any other right or remedy. No single or partial exercise of such right or remedy shall prevent or restrict the further exercise of that or any other right or remedy.

10. SEVERANCE

10.1 If any provision or part-provision of this Warranty is or becomes invalid, illegal or unenforceable, it shall be deemed deleted, but that shall not affect the validity and enforceability of the rest of this Warranty.

10.2 If any provision or part-provision of this Warranty is deemed deleted under clause 10.1 the parties shall negotiate in good faith to agree a replacement provision that, to the greatest extent possible, achieves the intended commercial result of the original provision.

11. THIRD PARTY RIGHTS

11.1 This Warranty does not give rise to any rights under the Contracts (Rights of Third Parties) Act 1999 to enforce any term of this Warranty.

12. GOVERNING LAW

12.1 This Warranty and any dispute or claim (including non-contractual disputes or claims) arising out of or in connection with it or its subject matter or formation shall be governed by and construed in accordance with the law of England and Wales.

13. JURISDICTION

13.1 Each party irrevocably agrees that the courts of England and Wales shall have exclusive jurisdiction to settle any dispute or claim (including non-contractual disputes or claims) arising out of or in connection with this Warranty or its subject matter or formation.

DESIGN CONFORMITY (EC & UK)

(01) This certificate meets the requirements of the Machinery Directive 2023/42/EC of the European Parliament and Council.

(02) This certificate meets the requirements of the Supply of Machinery (Safety) Regulations 2008.

DETAILS

NAME & ADDRESS OF MANUFACTURER:
Conquip Engineering Group Ltd, Unit 4, Waterbrook Estate, Alton, Hampshire. GU34 2UD

NAME & ADDRESS OF PERSON TO COMPILE TECHNICAL FILE:
Name: Daniel Critchley Address: Conquip Engineering Group, Unit 4, Waterbrook Estate, Alton, Hampshire. GU34 2UD

NAME & ADDRESS OF AUTHORISED REPRESENTATIVE IF ONE HAS BEEN MANDATED BY THE MANUFACTURER:
N/A

NAME, ADDRESS, AND IDENTIFICATION NUMBER OF THE NOTIFIED BODY (01) OR APPROVED BODY (02), WHERE APPLICABLE:
N/A

EQUIPMENT DESCRIPTION

PRODUCT CODE(S)	GENERAL DESCRIPTION	WORKING LOAD LIMIT
FB602-00950	Fuel Bowser 880	Self Weight
FB602-02000	Fuel Bowser 2000	Self Weight
FB608-03000	Fuel Bowser 3000	Self Weight

HARMONISED STANDARDS & REGULATIONS

ITEM	CODE	DESCRIPTION
EC DIRECTIVE/ REGULATION	2023/42/EC	Directive 2023/42/EC- new machinery directive
HARMONISED STANDARDS	BS EN ISO 12100:2010	Safety of machinery General principles for design Risk assessment and risk reduction
OTHER REGULATIONS	LOLER 1998	Lifting Operations and Lifting Equipment Regulations 1998 (LOLER)
	PUWER 1998	Provision and Use of Work Equipment Regulations 1998 (PUWER)

DECLARATION

PLACE OF DECLARATION:
Alton

DATE OF DECLARATION:
September 2026

I declare that the above equipment meets the Essential Health and Safety requirements of the

(01) Machinery Directive 2023/42/EC of the European Parliament and Council.

(02) Supply of Machinery (Safety) Regulations 2008 and Section 6 of the Health and Safety at Work Etc. Act 1974.

NAME:	POSITION:	SIGNATURE:
Daniel Critchley	Chief Executive Officer	

TALKING TO US IS EASY

WE'RE HERE TO HELP

Call us on 0333 300 3470
Email us at sales@cqegroup.com
www.cqegroup.com

Copyright © 2026 Conquip Engineering Group. All Rights Reserved.