USER GUIDE

CHAIN STORAGE RACK

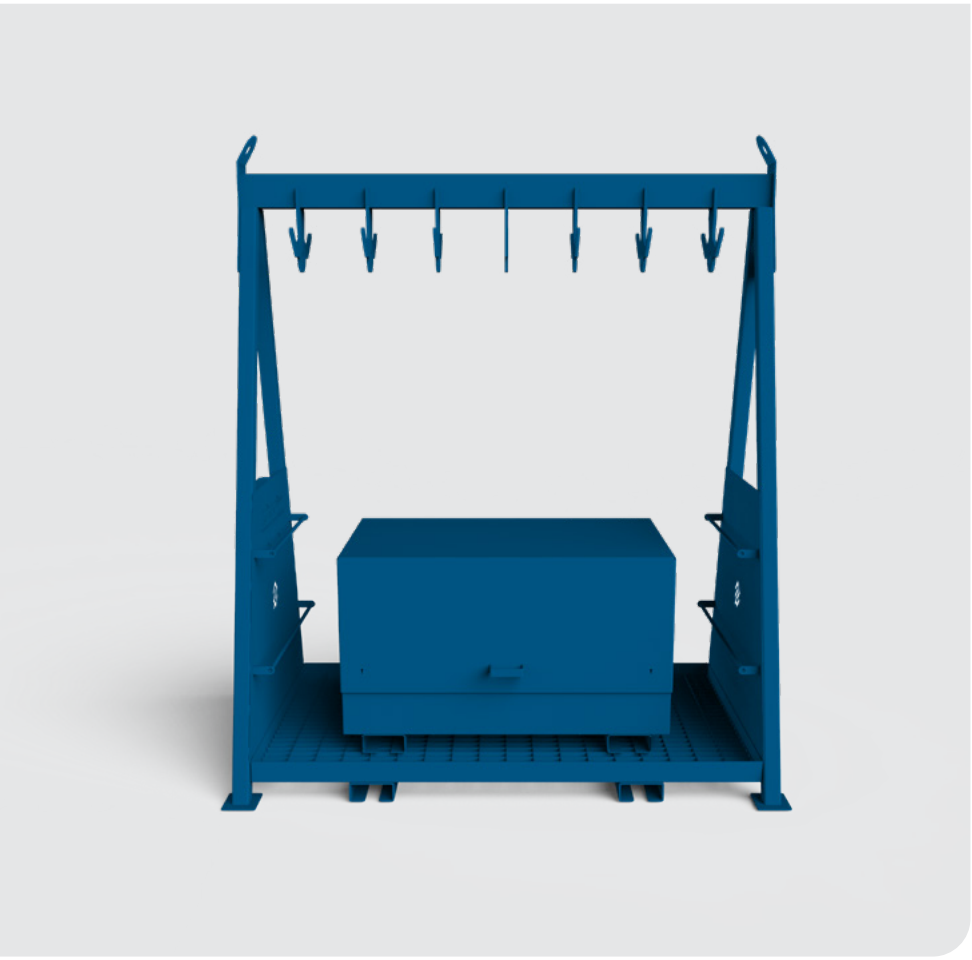

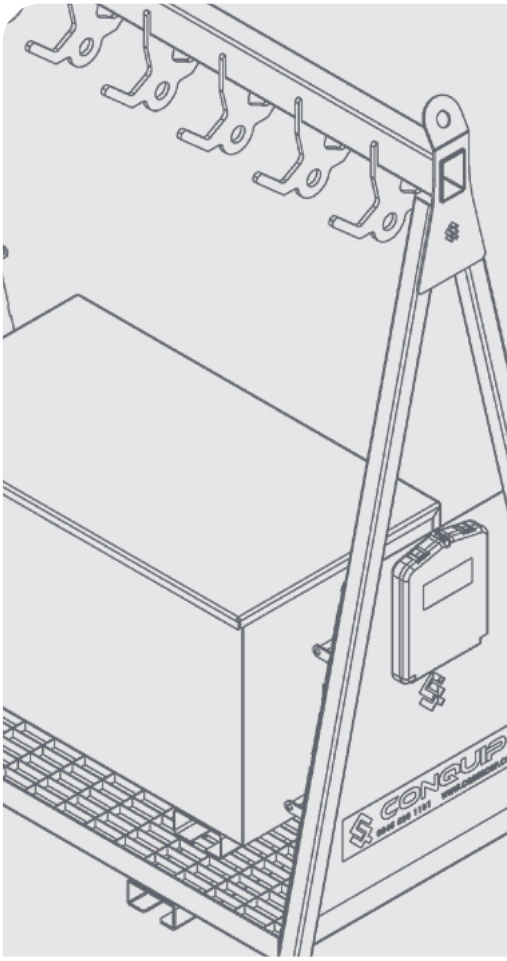

DISCLAIMER

Do not attempt to handle or operate this equipment before you have received sufficient training. Before use, operatives must have carried out all checks featured on the Visual Inspection Sheet on page 11. It is imperative that you have read the General Safety Instructions on page 12 and sufficiently familiarised yourself with the Operational Procedures in this document.

Note that this item is compliant only to the standards specified in this User Guide and it is therefore the duty of the responsible person(s) to review and ensure compliance.

CONTENTS

PRODUCT INFORMATION

INTRODUCTION 04
SPECIFICATION 05
PARTS DIAGRAM 07

OPERATIONAL PROCEDURES

IMPORTANT USAGE NOTES 08
LIFTING WITH A FORKLIFT 08
LIFTING WITH A CRANE 09

MAINTENANCE & INSPECTION

MAINTENANCE REGIME 10
VISUAL INSPECTION SHEET 11

GENERAL SAFETY INSTRUCTIONS

SAFETY INSTRUCTIONS 12
GENERAL NOTES 13

LEGAL

TERMS AND CONDITIONS 14
EC DESIGN CONFORMITY 18
STANDARDS AND REGULATIONS APPLICABLE 19

INTRODUCTION

OVERVIEW

The Conquip Chain Storage Rack is a robust, steel rack used as a central location to store a variety of chains, slings and other lifting equipment accessories, keeping it clean and organised.

The A-frame design provides maximum stability and ensures chains and slings are easy to access. Fourteen overhead hooks ensure the rack can be loaded from each side and a toolbox fixed to the base provides storage for smaller lifting accessories.

A weatherproof storage box on the side of the unit keeps all relevant documentation includng certificates and reports dry and with the corresponding lifting equipment.

KEY BENEFITS

- Fitted with a lockable toolbox for storing quarantined equipment or smaller lifting accessories.
- 'A' frame design provides maximum stability on uneven ground.
- Fourteen overhead hooks.
- Fork pockets and crane lifting points allow for easy manoeuvrability around site.
- Provided with weatherproof storage box for chain test certificates and reports.

CUSTOMISATION

- Mesh sides.
- Bars to hold shackles and hooks.
- Custom configurations or sizes.
- Company branding and colours.

support@cqegroup.com | +44 (0) 333 300 3470 | www.cqegroup.com

PRODUCT INFORMATION

SPECIFICATION

ITEM	PRODUCT CODE
Chain Storage Rack	ST111AS-01000



CODE	WEIGHT (kg)	HOOK WLL* (kg)	RACK WLL* (kg)
ST111AS-01000	340	100	1400

*Working Load Limit

support@cqegroup.com | +44 (0) 333 300 3470 | www.cqegroup.com

SPECIFICATION

ITEM	PRODUCT CODE
Chain Storage Rack	ST111AS-01000

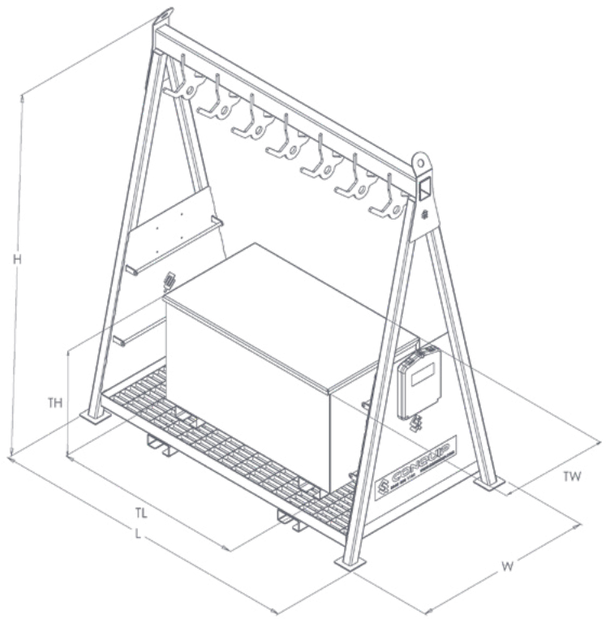

RACK			TOOLBOX		
LENGTH (mm)	WIDTH (mm)	HEIGHT (mm)	LENGTH (mm)	WIDTH (mm)	HEIGHT (mm)
2000	1148	2350	1200	620	630

PARTS DIAGRAM

CHAIN STORAGE RACK

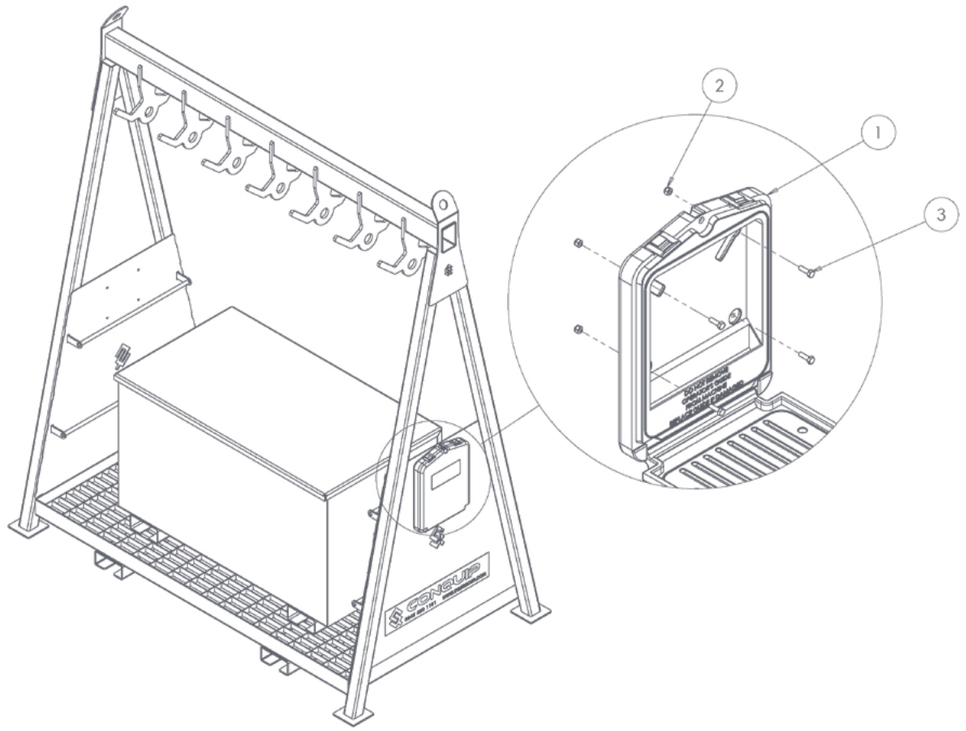

ITEM NUMBER	PART	DESCRIPTION	QUANTITY
1	ZZ990462	Test Certificate Storage Box	1
2	NS800826	M6 Nyloc Nut	4
3	NS800881	M6 x 20mm Hex Head Set Screw	4

NOTE: These parts are for this model, they may differ for previous versions. Please contact Conquip with any queries.

OPERATIONAL PROCEDURES

IMPORTANT USAGE NOTES

- The Chain Storage Rack is only designed to be lifted when unloaded, so ensure that the rack and the toolbox are both empty before attempting to manoeuvre it.
- Each hook on the rack has a maximum Working Load Limit of 100kg.
- The maximum Working Load Limit of the Chain Storage Rack is 1400kg.
- Be aware that the storage hooks could be at head level when loading with equipment.
- Load the overhead hooks with chains and hooks as required.
- Other lifting equipment and quarantined items can be stored in the toolbox.
- Chain test certificates and reports can be stored in the weatherproof storage box at one end of the rack.

LIFTING WITH A FORKLIFT OR TELEHANDLER

01. Ensure both the rack and the toolbox are empty before attempting to lift.
02. To lift the Chain Storage Rack with a forklift or telehandler, set the machine's forks to the correct width for the Chain Storage Rack's fork pockets. Make sure that they are equidistant from the centre.
03. Drive the forkliftor telehandler to the Chain Storage Rack, aligning the forks with the fork pockets.
04. Move the machine forward until the forks are fully inserted into the fork pockets. The Chain Storage Rack is now ready to lift.
05. Carefully raise the rack just off the ground and check for balance and security.
06. Carefully transport the rack to its required destination, taking care not to jolt.
07. When in position, slowly lower the rack and place onto firm, level ground.
08. Reverse the machine back and clear of the rack.

LIFTING WITH A CRANE

01. Ensure both the rack and the toolbox are empty before attempting to lift.
02. Attach a suitable two-leg chain sling to the two Chain Storage Rack's lifting points.
03. Carefully raise the rack just off the ground and check for balance and security.
04. Carefully transport the rack to its required destination, taking care not to jolt.
05. When in position, slowly lower the rack and place onto firm, level ground.
06. Detach the rack from the lifting chains.

MAINTENANCE & INSPECTION

MAINTENANCE REGIME

- It is mandatory that the equipment is thoroughly examined regularly, by a qualified engineer, to ensure compliance with relevant regulations. Conquip recommend carrying out a thorough examination every six months.
- This equipment may incorporate various loose and detachable items including, but not limited to pins, bolt assemblies and adaption plates. Refer to the separate requirements for the safe use of those items.
- When not being used, store the unit in a clean, upright condition and in a safe place where it will be protected from thieves and unauthorised users.
- This equipment must be inspected by the responsible person before each use and then regularly, as determined by your risk assessment or working practice. If you have any concerns about the equipment's condition or suitability, do not use it.

VISUAL INSPECTION CHECKLIST

INSPECTION ITEMS	RESULTS		COMMENTS
	SATISFACTORY	UNSATISFACTORY	
Serial Number			CQ.....
Product Code			
Working Load Limit (kg)			
Conforms to user guide specification			
Check the lifting points for bends or damage			
Check the overhead hooks for bends or damage			
Check the condition of the certifcate storage box			
Check the toolbox is accessible and operational			
Check the condition of the mesh base			
Check the fork pockets for bends or damage			
Carry out a general visual inspection of the body			
SIGNATURE			
Name	Position	Qualification	Signature & Date

GENERAL SAFETY INSTRUCTIONS

The equipment should be properly operated and maintained to keep it in a safe, efficient operating condition. Be sure that all fixings and components are free of mud or other matter that might cause issues hazardous to the operator, serviceman, or other personnel or equipment. Report all malfunctions to those responsible for maintenance, and do not operate the equipment until corrected. Normal service or maintenance performed as required can prevent unexpected and unnecessary downtime.

This operations manual describes general inspections, servicing and operation with the normal safety precautions required for normal servicing and operating conditions. It is not a guide, however, for abnormal conditions or situations, and therefore, servicemen and operators must be safety conscious and alert to recognise potential servicing or operating safety hazards at all times, and take necessary precautions to assure safe servicing and operation of the equipment.



M002
Refer to instructions manual



M004
Wear eye protection



M008
Wear safety footwear



M009
Wear protective gloves



M010
Wear protective clothing



M014
Wear head protection



M015
Wear high-visibility clothing

GENERAL NOTES

- Read this operations manual and learn the operating characteristics and limitations of the equipment. Know what operating clearances the machine requires.
- Read and understand all the safety signs prior to operation.
- If the safety signs are obstructed by dirt or debris, clean them using mild soap and water prior to operation.
- If the safety signs are damaged or illegible, replace them immediately, prior to operation.
- Be aware of operating hazards that weather changes can create on the job. Know proper procedures to follow when a severe rain or electrical storm strikes.
- Never attempt to operate or work on machinery when not feeling physically fit.
- Never wear loose clothing, rings, watches, heavy gloves etc., that might catch and result in injury.
- Know what safety equipment is required and use it. Such equipment may be: hard hat, safety glasses, reflector type vests, protective gloves and safety footwear.

TERMS & CONDITIONS

CONQUIP ENGINEERING GROUP STANDARD PRODUCT WARRANTY

01. COMMENCEMENT

1.1 This Warranty shall commence on the Commencement Date and shall continue until the earlier of:

(a) the Expiry Date; or

(b) the date on which it may be voided in accordance with clause 4.1(b)

when it shall terminate automatically without notice.

02. DUTY OF GOOD FAITH

2.1 The Purchaser shall in the exercise of its rights under this Warranty and in the compliance with its obligations under this Warranty be subject to and shall in all respects owe and comply with a duty of good faith to the Warrantor.

03. NATURE AND EXTENT OF COVER

3.1 Subject to clause 3.2 the Warrantor agrees and undertakes to the Purchaser that it shall be liable to the Purchaser under and in accordance with the terms of this Warranty in the event that:

(a) prior to the Expiry Date the Purchaser shall notify a Warranty Claim to the Warrantor; and

(b) the Equipment or any relevant part of the Equipment shall have become unusable as the result of defective material or defective workmanship prior to the Expiry Date.

3.2 The Warrantor's obligation under clause 3.1 shall be expressly subject to the provisions of clauses 4, 5 and 6 and conditional upon the Purchaser's compliance in full with the provisions of clause 7.

04. RESTRICTIONS

4.1 The following restrictions apply to this Warranty:

(a) This Warranty is personal to the Purchaser and neither the legal benefit nor legal burden of this warranty may be assigned or novated or otherwise transferred by the Purchaser to any other party. Any purported assignment, novation or transfer shall not be binding upon the Warrantor.

(b) This Warranty shall be void in the event that the Purchaser:

(i) cannot provide authentic and original documentary evidence that the Purchaser has during the period between the Commencement Date and the Expiry Date complied with the Maintenance and Servicing Requirements; and/or

(ii) has, during the period between the Commencement Date and the Expiry Date, exceeded the Purchaser's Usage Cycle Parameters; and/or

(iii) has, during the period between the Commencement Date and the Expiry Date, exceeded the Purchaser's Use Parameters; and/or

(iv) has carried out, or procured the carrying out by any third party of, any repair to the Equipment or any part of the Equipment which is not an Authorised Repair; and/or

(v) has operated the Equipment after having replaced any part of the Equipment with a part which has not been supplied and fitted by the Warrantor; and/or

(vi) has modified the Equipment in any way prior to use.

05. EXCLUSIONS

5.1 The following are excluded from the scope of this Warranty:

(a) Loss of and/ or damage to the Equipment or any part of it resulting from any collision between the Equipment and any other fixed or stationary or mobile object whatsoever, irrespective of whether that collision was or was not caused by the Purchaser; and/or

(b) Loss of and/or damage to any personal property and/or possessions or other equipment not forming part of the Equipment but which is present in or about the Equipment; and/or

(c) loss and/or damage which is covered by any other insurance policy taken out and maintained by the Purchaser or in respect of which the Purchaser has a contractual obligation to do so; and/or

(d) loss and/or damage to the equipment which is consistent with the use by the Purchaser of the Equipment:

(i) in compliance with the Maintenance and Servicing Requirements; and

(ii) in compliance with the Usage Cycle Parameters; and

(iii) in compliance with the Use Parameters; and

(iv) having only carried out Authorised Repairs to the Equipment; and

(v) having all and any replacement parts fitted by the Warrantor; and

(vi) in unmodified form.

06. LIMITATION OF LIABILITY

6.1 The Warrantor's liability to the Purchaser shall be limited as follows:

(a) The Warrantor shall not in any circumstances be liable to the Purchaser for indirect and/or consequential and/or economic loss suffered and/or incurred as the case may be by the Purchaser; and

(b) The Warrantor shall only be liable to the Purchaser for the reasonable and proper costs reasonably and properly incurred by the Purchaser directly in connection with the repair and/or replacement (at the Warrantor's absolute discretion) of the Equipment or any part of the Equipment; and

(c) The Warrantor's liability to the Purchaser shall notwithstanding any other provision of this Warranty, not in any circumstances exceed the Purchase Price of the Equipment.

07. WARRANTY CLAIMS

7.1 The Purchaser shall in respect of any claim against the Warrantor under this Warranty and within 24 hours of the occurrence of the subject matter of the Warranty Claim:

(a) Complete in full and submit to the Warrantor a Warranty Claim in the form annexed to Schedule 4;

(b) Provide date stamped or date identifiable photographs evidencing the claim; and

(c) Make the Equipment or the relevant part of the Equipment available to the Warrantor for inspection within 48 hours of notification of the relevant Warranty Claim.

08. ENTIRE AGREEMENT

8.1 This Warranty constitutes the entire agreement between the parties and supersedes and extinguishes all previous promises, assurances, warranties, representations and understandings between them, whether written or oral, relating to its subject matter.

8.2 Each party agrees that it shall have no remedies in respect of any statement, representation, assurance or warranty (whether made innocently or negligently) that is not set out in this Warranty. Each party agrees that it shall have no claim for innocent or negligent misrepresentation or negligent misstatement based on any statement in this Warranty.

No variation of this Warranty shall be effective unless it is in writing and signed by the parties (or their authorised representatives).

09. WAIVER

No failure or delay by a party to exercise any right or remedy provided under this Warranty or by law shall constitute a waiver of that or any other right or remedy, nor shall it prevent or restrict the further exercise of that or any other right or remedy. No single or partial exercise of such right or remedy shall prevent or restrict the further exercise of that or any other right or remedy.

10. SEVERANCE

10.1 If any provision or part-provision of this Warranty is or becomes invalid, illegal or unenforceable, it shall be deemed deleted, but that shall not affect the validity and enforceability of the rest of this Warranty.

10.2 If any provision or part-provision of this Warranty is deemed deleted under clause 10.1 the parties shall negotiate in good faith to agree a replacement provision that, to the greatest extent possible, achieves the intended commercial result of the original provision.

11. THIRD PARTY RIGHTS

11.1 This Warranty does not give rise to any rights under the Contracts (Rights of Third Parties) Act 1999 to enforce any term of this Warranty.

12. GOVERNING LAW

12.1 This Warranty and any dispute or claim (including non-contractual disputes or claims) arising out of or in connection with it or its subject matter or formation shall be governed by and construed in accordance with the law of England and Wales.

13. JURISDICTION

13.1 Each party irrevocably agrees that the courts of England and Wales shall have exclusive jurisdiction to settle any dispute or claim (including non-contractual disputes or claims) arising out of or in connection with this Warranty or its subject matter or formation.

DESIGN CONFORMITY (EC & UK)

(01) This certificate meets the requirements of the Machinery Directive 2023/42/EC of the European Parliament and Council.

(02) This certificate meets the requirements of the Supply of Machinery (Safety) Regulations 2008.

DETAILS

NAME & ADDRESS OF MANUFACTURER:
Conquip Engineering Group Ltd, Unit 4, Waterbrook Estate, Alton, Hampshire. GU34 2UD

NAME & ADDRESS OF PERSON TO COMPILE TECHNICAL FILE:
Name: Daniel Critchley Address: Conquip Engineering Group, Unit 4, Waterbrook Estate, Alton, Hampshire. GU34 2UD

NAME & ADDRESS OF AUTHORISED REPRESENTATIVE IF ONE HAS BEEN MANDATED BY THE MANUFACTURER:
N/A

NAME, ADDRESS, AND IDENTIFICATION NUMBER OF THE NOTIFIED BODY (01) OR APPROVED BODY (02), WHERE APPLICABLE:
N/A

EQUIPMENT DESCRIPTION

PRODUCT CODE(S)	GENERAL DESCRIPTION	WORKING LOAD LIMIT
ST111AS-01000	Chain Storage Rack	1400kg

HARMONISED STANDARDS & REGULATIONS

ITEM	CODE	DESCRIPTION
EC DIRECTIVE/ REGULATION	2023/42/EC	Directive 2023/42/EC- new machinery directive
HARMONISED STANDARDS	BS EN ISO 12100:2010	Safety of machinery General principles for design Risk assessment and risk reduction
	BS EN 13155:2020	Crane Safety. Non-fixed load lifting attachments
OTHER REGULATIONS	LOLER 1998	Lifting Operations and Lifting Equipment Regulations 1998 (LOLER)
	PUWER 1998	Provision and Use of Work Equipment Regulations 1998 (PUWER)

DECLARATION

PLACE OF DECLARATION:
Alton

DATE OF DECLARATION:
June 2026

I declare that the above equipment meets the Essential Health and Safety requirements of the

(01) Machinery Directive 2023/42/EC of the European Parliament and Council.

(02) Supply of Machinery (Safety) Regulations 2008 and Section 6 of the Health and Safety at Work Etc. Act 1974.

NAME:	POSITION:	SIGNATURE:
Daniel Critchley	Chief Executive Officer	

TALKING TO US IS EASY

WE'RE HERE TO HELP

Call us on 0333 300 3470
Email us at sales@cqegroup.com
www.cqegroup.com

Copyright © 2026 Conquip Engineering Group. All Rights Reserved.