USER GUIDE

COSHH STORAGE CABINET



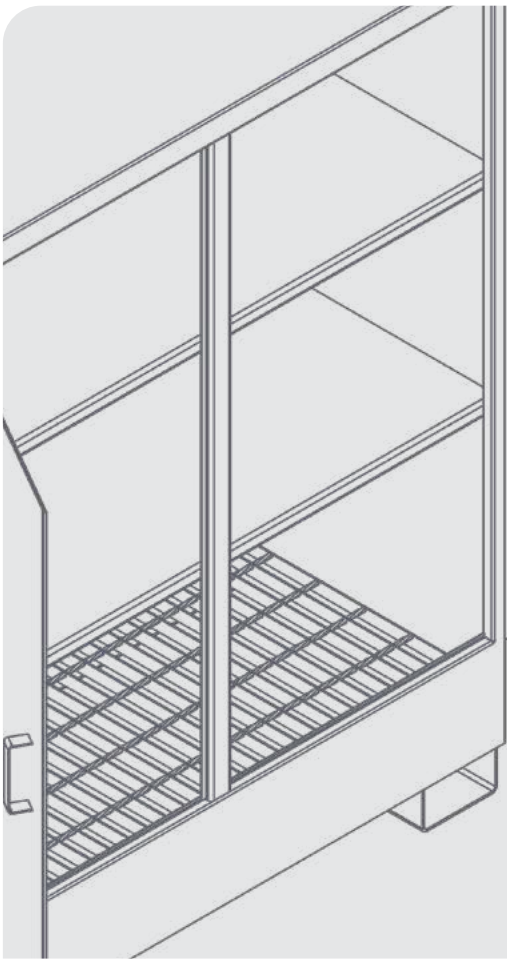

DISCLAIMER

Do not attempt to handle or operate this equipment before you have received sufficient training. Before use, operatives must have carried out all checks featured on the Visual Inspection Sheet on page 11. It is imperative that you have read the General Safety Instructions on page 12 and sufficiently familiarised yourself with the Operational Procedures in this document.

Note that this item is compliant only to the standards specified in this User Guide and it is therefore the duty of the responsible person(s) to review and ensure compliance.

CONTENTS

PRODUCT INFORMATION

INTRODUCTION 04

SPECIFICATION 05

OPERATIONAL PROCEDURES

IMPORTANT USAGE NOTES 08

HIRE CONTRACT TERMS & CONDITIONS 08

LIFTING WITH A FORKLIFT 08

LIFTING WITH A CRANE 09

MAINTENANCE & INSPECTION

MAINTENANCE REGIME 10

VISUAL INSPECTION SHEET 11

GENERAL SAFETY INSTRUCTIONS

SAFETY INSTRUCTIONS 12

GENERAL NOTES 13

LEGAL

TERMS AND CONDITIONS 14

EC DESIGN CONFORMITY 18

STANDARDS AND REGULATIONS APPLICABLE 19

INTRODUCTION

OVERVIEW

The Conquip COSHH Storage Cabinet is a flame-proof storage unit for chemicals or flammable materials and bottles. The doors are fitted with 5-lever deadlocks on both sides to secure unit against theft and misuse of stored materials.

The unit features vents positioned high and low to prevent the build-up of fumes. It is fitted with a spill containment sump to contain any spills and a removable grate for easy disposal of contained liquid.

Internal adjustable shelves ensure for the efficient use of space and the separation of varying products. Fork pockets allow for easy manoeuvre around site when the unit is empty.

KEY BENEFITS

- COSHH compliant and suitable for the storage of flammables and or chemicals.
- Multiple vents to prevent the build-up of fumes.
- Doors fitted with 5-lever deadlocks on both sides.
- Removable grate over the spill containment sump for quick and safe removal of spilt liquids.
- Supplied with fork pockets for safe placement and relocation.
- Complete with storage box for test certification.
- Safety signage included.

SPECIFICATION

THE RANGE



CODE	ITEM	WEIGHT (kg)	SUMP CAPACITY (litres)
ST114AC-00259	COSHH Storage Cabinet (Flame Proof) 259	45	40
ST114AC-00585	COSHH Storage Cabinet (Flame Proof) 585	74	115
ST114AC-01086	COSHH Storage Cabinet (Flame Proof) 1086	111	130

SPECIFICATION

ITEM	PRODUCT CODE
COSHH Storage Cabinet (Flame Proof) 259	ST114AC-00259
COSHH Storage Cabinet (Flame Proof) 585	ST114AC-00585
COSHH Storage Cabinet (Flame Proof) 1086	ST114AC-01086

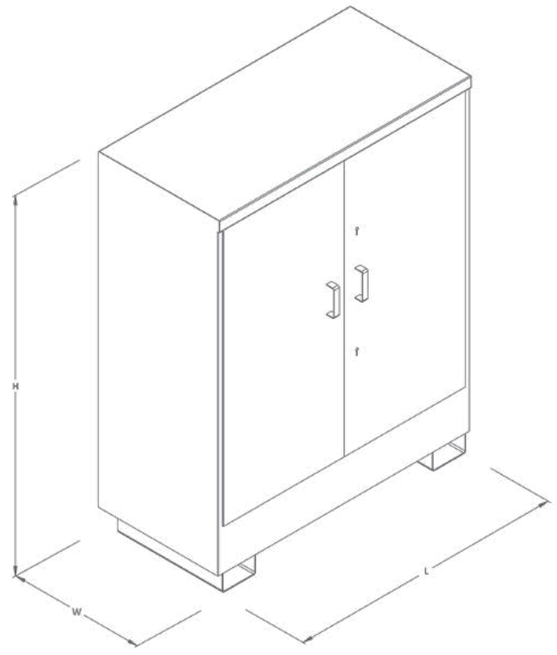

EXTERNAL			INTERNAL			
LENGTH (mm)	**WIDTH** (mm)	**HEIGHT** (mm)	**LENGTH** (mm)	**WIDTH** (mm)	**HEIGHT** (mm)	**FORK POCKETS** (mm)
505	540	980	410	455	715	160 x 65
800	585	1260	710	505	885	160 x 65
1205	585	1560	1050	510	1185	160 x 65

PRODUCT INFORMATION

OPERATIONAL PROCEDURES

IMPORTANT USAGE NOTES

- The COSHH Storage Cabinet is designed to be lifted when empty only. Do not raise or transport whilst storing materials or bottles.
- Do not store any containers that are leaking, has its valve open or show signs of damage.
- Do not store materials that are too big to be stored in the correct upright position.
- It is the responsibility of the supervisor to ensure that no harmful chemicals are removed by unauthorised users.

HIRE CONTRACT TERMS & CONDITIONS

⚠️ The minimum hire is a 12 week period. At the point of off hire, we will require photos of the inside, and it must be completely empty for collection. We would require certificates of what's been stored inside throughout the hire. Cleaning charges may apply.

LIFTING WITH A FORKLIFT

01. To lift the COSHH Storage Cabinet with a forklift, set the machine's forks to the correct width for the fork pockets. Make sure that they are equidistant from the centre.
02. Drive the forklift to the COSHH Storage Cabinet aligning, the forks with the fork pockets.
03. Double check that all is correctly aligned, then move the forklift forward until the forks are fully inserted into the fork pockets. The COSHH Storage Cabinet is now ready to move.
04. Carefully raise the cabinet just off the ground and check for balance and security.
05. Carefully transport the cabinet to its required destination, taking care not to jolt the load.
06. When in position, the cabinet can be lowered onto firm, level ground.
07. Reverse the forklift back and clear of the cabinet.
08. Load the cabinet with materials and padlock the door for security measures.
09. If a spillage occurs, it can be safely and easily cleaned up by removing the mesh grate over the spill containment sump and washing out. Ensure the grate is refitted once cleaned.

OPERATIONAL PROCEDURES

MAINTENANCE & INSPECTION

MAINTENANCE REGIME

- It is mandatory that the equipment is thoroughly examined regularly, by a qualified engineer, to ensure compliance with relevant regulations. Conquip recommend carrying out a thorough examination every six months.
- This equipment may incorporate various loose and detachable items including, but not limited to pins, bolt assemblies and adaption plates. Refer to the separate requirements for the safe use of those items.
- When not being used, store the unit in a clean, upright condition and in a safe place where it will be protected from thieves and unauthorised users.
- This equipment must be inspected by the responsible person before each use and then regularly, as determined by your risk assessment or working practice. If you have any concerns about the machinery's condition or suitability, do not use it.

VISUAL INSPECTION CHECKLIST

INSPECTION ITEMS	RESULTS		COMMENTS
	PASS	FAIL	
Serial Number			CQ.....
Product Code			
Working Load Limit (kg)			
Conforms to user guide specification			
Check unit security – condition and operation of locking devices			
Check the door operation and condition			
Check the floor for damage or distortion to grating			
Check the sump is clean, dry and there are no spills or hazardous residue			
Check the shelving for bends or distortion			
Check the vents are clear of obstructions			
Check correct signage is in place (external and internal)			
General visual inspection of the body			

SIGNATURE			
Name	Position	Qualification	Signature & Date

GENERAL SAFETY INSTRUCTIONS

The equipment should be properly operated and maintained to keep it in a safe, efficient operating condition. Be sure that all fixings and components are free of mud or other matter that might cause issues hazardous to the operator, service personnel and other personnel or equipment. Report all malfunctions to those responsible for maintenance, or do not operate the equipment until corrected. Normal service or maintenance performed as required can prevent unexpected and unnecessary downtime.

This operations manual describes general inspections, servicing and operation with the normal safety precautions required for normal servicing and operating conditions. It is not a guide, however, for abnormal conditions or situations, and therefore service personnel and operators must be safety conscious and alert to recognise potential servicing or operating safety hazards at all times, and take necessary precautions to assure safe servicing and operation of the equipment.



M002
Refer to instructions manual



M004
Wear eye protection



M008
Wear safety footwear



M009
Wear protective gloves



M010
Wear protective clothing



M014
Wear head protection



M015
Wear high-visibility clothing

GENERAL NOTES

- Read this operations manual and learn the operating characteristics and limitations of the equipment. Know what operating clearances the machine requires.
- Read and understand all the safety signs prior to operation.
- If the safety signs are obstructed by dirt or debris, clean them using mild soap and water prior to operation.
- If the safety signs are damaged or illegible, replace them immediately, prior to operation.
- Be aware of operating hazards that weather changes can create on the job. Know proper procedures to follow when a severe rain or electrical storm strikes.
- Never attempt to operate or work on machinery when not feeling physically fit.
- Never wear loose clothing, rings, watches, heavy gloves etc., that might catch and result in injury.
- Know what safety equipment (PPE) is required and use it. Such equipment may be: hard hat, safety glasses, reflector type vests, protective gloves and safety footwear.

TERMS & CONDITIONS

CONQUIP ENGINEERING GROUP STANDARD PRODUCT WARRANTY

01. COMMENCEMENT

1.1 This Warranty shall commence on the Commencement Date and shall continue until the earlier of:

(a) the Expiry Date; or

(b) the date on which it may be voided in accordance with clause 4.1(b)

when it shall terminate automatically without notice.

02. DUTY OF GOOD FAITH

2.1 The Purchaser shall in the exercise of its rights under this Warranty and in the compliance with its obligations under this Warranty be subject to and shall in all respects owe and comply with a duty of good faith to the Warrantor.

03. NATURE AND EXTENT OF COVER

3.1 Subject to clause 3.2 the Warrantor agrees and undertakes to the Purchaser that it shall be liable to the Purchaser under and in accordance with the terms of this Warranty in the event that:

(a) prior to the Expiry Date the Purchaser shall notify a Warranty Claim to the Warrantor; and

(b) the Equipment or any relevant part of the Equipment shall have become unusable as the result of defective material or defective workmanship prior to the Expiry Date.

3.2 The Warrantor's obligation under clause 3.1 shall be expressly subject to the provisions of clauses 4, 5 and 6 and conditional upon the Purchaser's compliance in full with the provisions of clause 7.

04. RESTRICTIONS

4.1 The following restrictions apply to this Warranty:

(a) This Warranty is personal to the Purchaser and neither the legal benefit nor legal burden of this warranty may be assigned or novated or otherwise transferred by the Purchaser to any other party. Any purported assignment, novation or transfer shall not be binding upon the Warrantor.

(b) This Warranty shall be void in the event that the Purchaser:

(i) cannot provide authentic and original documentary evidence that the Purchaser has during the period between the Commencement Date and the Expiry Date complied with the Maintenance and Servicing Requirements; and/or

(ii) has, during the period between the Commencement Date and the Expiry Date, exceeded the Purchaser's Usage Cycle Parameters; and/or

(iii) has, during the period between the Commencement Date and the Expiry Date, exceeded the Purchaser's Use Parameters; and/or

(iv) has carried out, or procured the carrying out by any third party of, any repair to the Equipment or any part of the Equipment which is not an Authorised Repair; and/or

(v) has operated the Equipment after having replaced any part of the Equipment with a part which has not been supplied and fitted by the Warrantor; and/or

(vi) has modified the Equipment in any way prior to use.

05. EXCLUSIONS

5.1 The following are excluded from the scope of this Warranty:

(a) Loss of and/ or damage to the Equipment or any part of it resulting from any collision between the Equipment and any other fixed or stationary or mobile object whatsoever, irrespective of whether that collision was or was not caused by the Purchaser; and/or

(b) Loss of and/or damage to any personal property and/or possessions or other equipment not forming part of the Equipment but which is present in or about the Equipment; and/or

(c) loss and/or damage which is covered by any other insurance policy taken out and maintained by the Purchaser or in respect of which the Purchaser has a contractual obligation to do so; and/or

(d) loss and/or damage to the equipment which is consistent with the use by the Purchaser of the Equipment:

(i) in compliance with the Maintenance and Servicing Requirements; and

(ii) in compliance with the Usage Cycle Parameters; and

(iii) in compliance with the Use Parameters; and

(iv) having only carried out Authorised Repairs to the Equipment; and

(v) having all and any replacement parts fitted by the Warrantor; and

(vi) in unmodified form.

06. LIMITATION OF LIABILITY

6.1 The Warrantor's liability to the Purchaser shall be limited as follows:

(a) The Warrantor shall not in any circumstances be liable to the Purchaser for indirect and/or consequential and/or economic loss suffered and/or incurred as the case may be by the Purchaser; and

(b) The Warrantor shall only be liable to the Purchaser for the reasonable and proper costs reasonably and properly incurred by the Purchaser directly in connection with the repair and/or replacement (at the Warrantor's absolute discretion) of the Equipment or any part of the Equipment; and

(c) The Warrantor's liability to the Purchaser shall notwithstanding any other provision of this Warranty, not in any circumstances exceed the Purchase Price of the Equipment.

07. WARRANTY CLAIMS

7.1 The Purchaser shall in respect of any claim against the Warrantor under this Warranty and within 24 hours of the occurrence of the subject matter of the Warranty Claim:

(a) Complete in full and submit to the Warrantor a Warranty Claim in the form annexed to Schedule 4;

(b) Provide date stamped or date identifiable photographs evidencing the claim; and

(c) Make the Equipment or the relevant part of the Equipment available to the Warrantor for inspection within 48 hours of notification of the relevant Warranty Claim.

08. ENTIRE AGREEMENT

8.1 This Warranty constitutes the entire agreement between the parties and supersedes and extinguishes all previous promises, assurances, warranties, representations and understandings between them, whether written or oral, relating to its subject matter.

8.2 Each party agrees that it shall have no remedies in respect of any statement, representation, assurance or warranty (whether made innocently or negligently) that is not set out in this Warranty. Each party agrees that it shall have no claim for innocent or negligent misrepresentation or negligent misstatement based on any statement in this Warranty.

No variation of this Warranty shall be effective unless it is in writing and signed by the parties (or their authorised representatives).

09. WAIVER

No failure or delay by a party to exercise any right or remedy provided under this Warranty or by law shall constitute a waiver of that or any other right or remedy, nor shall it prevent or restrict the further exercise of that or any other right or remedy. No single or partial exercise of such right or remedy shall prevent or restrict the further exercise of that or any other right or remedy.

10. SEVERANCE

10.1 If any provision or part-provision of this Warranty is or becomes invalid, illegal or unenforceable, it shall be deemed deleted, but that shall not affect the validity and enforceability of the rest of this Warranty.

10.2 If any provision or part-provision of this Warranty is deemed deleted under clause 10.1 the parties shall negotiate in good faith to agree a replacement provision that, to the greatest extent possible, achieves the intended commercial result of the original provision.

11. THIRD PARTY RIGHTS

11.1 This Warranty does not give rise to any rights under the Contracts (Rights of Third Parties) Act 1999 to enforce any term of this Warranty.

12. GOVERNING LAW

12.1 This Warranty and any dispute or claim (including non-contractual disputes or claims) arising out of or in connection with it or its subject matter or formation shall be governed by and construed in accordance with the law of England and Wales.

13. JURISDICTION

13.1 Each party irrevocably agrees that the courts of England and Wales shall have exclusive jurisdiction to settle any dispute or claim (including non-contractual disputes or claims) arising out of or in connection with this Warranty or its subject matter or formation.

DESIGN CONFORMITY (EC & UK)

(01) This certificate meets the requirements of the Machinery Directive 2023/42/EC of the European Parliament and Council.

(02) This certificate meets the requirements of the Supply of Machinery (Safety) Regulations 2008.

DETAILS

NAME & ADDRESS OF MANUFACTURER:
Conquip Engineering Group Ltd, Unit 4, Waterbrook Estate, Alton, Hampshire. GU34 2UD

NAME & ADDRESS OF PERSON TO COMPILE TECHNICAL FILE:
Name: Daniel Critchley Address: Conquip Engineering Group, Unit 4, Waterbrook Estate, Alton, Hampshire. GU34 2UD

NAME & ADDRESS OF AUTHORISED REPRESENTATIVE IF ONE HAS BEEN MANDATED BY THE MANUFACTURER:
N/A

NAME, ADDRESS, AND IDENTIFICATION NUMBER OF THE NOTIFIED BODY (01) OR APPROVED BODY (02), WHERE APPLICABLE:
N/A

EQUIPMENT DESCRIPTION

PRODUCT CODE(S)	GENERAL DESCRIPTION	WORKING LOAD LIMIT
ST114AC-00259	COSHH Storage Cabinet 259	N/A
ST114AC-00585	COSHH Storage Cabinet 585	N/A
ST114AC-01086	COSHH Storage Cabinet 1086	N/A
ST114AB-01811	COSHH Storage Cabinet 1811	N/A
ST114AB-02278	COSHH Storage Cabinet 2278	N/A

HARMONISED STANDARDS & REGULATIONS

ITEM	CODE	DESCRIPTION
EC DIRECTIVE/ REGULATION	2023/42/EC	Directive 2023/42/EC- new machinery directive
HARMONISED STANDARDS	BS EN ISO 12100:2010	Safety of machinery General principles for design Risk assessment and risk reduction
OTHER REGULATIONS	LOLER 1998	Lifting Operations and Lifting Equipment Regulations 1998 (LOLER)
	PUWER 1998	Provision and Use of Work Equipment Regulations 1998 (PUWER)

DECLARATION

PLACE OF DECLARATION:
Alton

DATE OF DECLARATION:
June 2026

I declare that the above equipment meets the Essential Health and Safety requirements of the

(01) Machinery Directive 2023/42/EC of the European Parliament and Council.

(02) Supply of Machinery (Safety) Regulations 2008 and Section 6 of the Health and Safety at Work Etc. Act 1974.

NAME:	POSITION:	SIGNATURE:
Daniel Critchley	Chief Executive Officer	

TALKING TO US IS EASY

WE'RE HERE TO HELP

Call us on 0333 300 3470
Email us at sales@cqegroup.com
www.cqegroup.com

Copyright © 2026 Conquip Engineering Group. All Rights Reserved.