USER GUIDE

EXCAVATOR BUCKET BOX

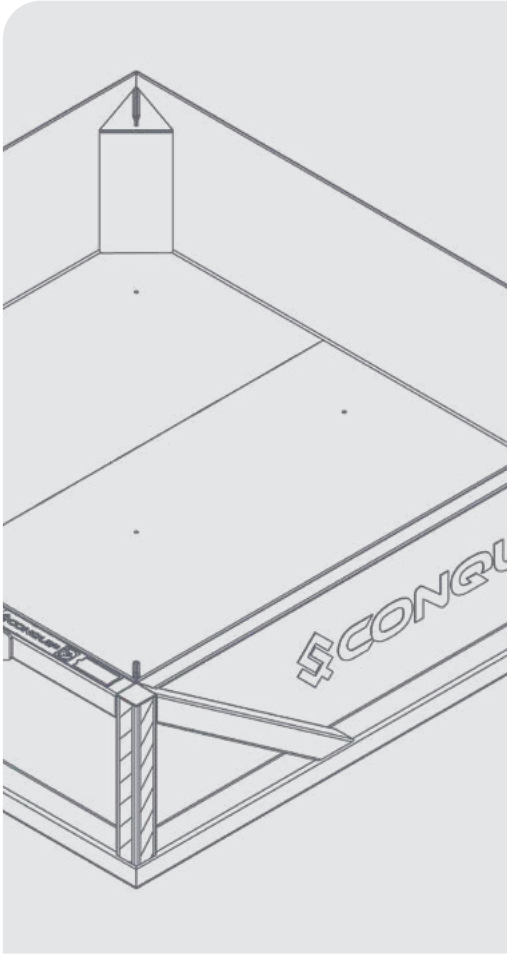

DISCLAIMER

Do not attempt to handle or operate this equipment before you have received sufficient training. Before use, operatives must have carried out all checks featured on the Visual Inspection Sheet on page 11. It is imperative that you have read the General Safety Instructions on page 12 and sufficiently familiarised yourself with the Operational Procedures in this document.

Note that this item is compliant only to the standards specified in this User Guide and it is therefore the duty of the responsible person(s) to review and ensure compliance.

CONTENTS

PRODUCT INFORMATION

INTRODUCTION 04
SPECIFICATION 05
PARTS DIAGRAM 06

INTENDED USE

LIFTING AND CARRYING 08

OPERATIONAL PROCEDURES

IMPORTANT USAGE NOTES 09
USING WITH AN EXCAVATOR 09

MAINTENANCE & INSPECTION

MAINTENANCE REGIME 10
VISUAL INSPECTION SHEET 11

GENERAL SAFETY INSTRUCTIONS

SAFETY INSTRUCTIONS 12
GENERAL NOTES 13

LEGAL

TERMS AND CONDITIONS 14
EC DESIGN CONFORMITY 18
STANDARDS AND REGULATIONS APPLICABLE 19

INTRODUCTION

OVERVIEW

The Excavator Bucket Box is an attachment stillage for transporting excavator buckets around site. This allows the operator to keep different sizes and types of buckets with the machine at all times, reducing downtime tracking back and forth to the 'bucket compound' on site.

Fork pockets allow for easy loading and unloading when storing or transporting to and from site. Due to its versatile design, the Excavator Bucket Box could also be used for other excavator attachments, such as excavator forks, site materials and hand tools.

KEY BENEFITS

- Solid steel floor with drainage holes ensures there is no build-up of dirt or water.
- Eliminates need to track back and forth to change the size and type of bucket.
- Prevents buckets, tools and excavator attachments being left around site.
- Removes chance of losing buckets and tools, incurring lost charges/replacement costs from excavator hire companies.
- Fork pockets allow for easy load and unload when storing or transporting.
- Supplied with 65mm and 80mm pins to suit 13-22 tonne excavators.
- Can be transported by excavator, forklift or lifting chains.

SPECIFICATION

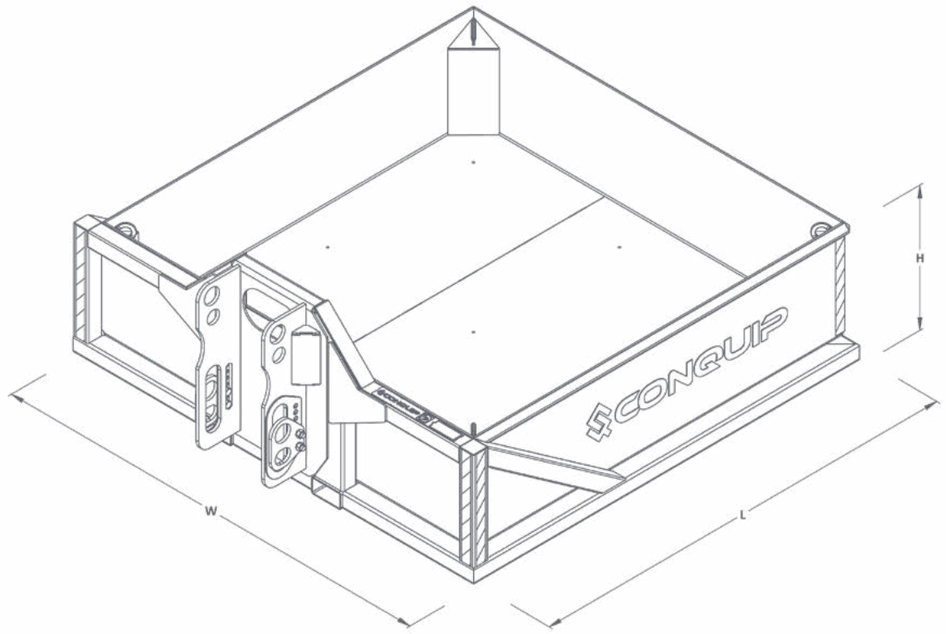

CODE	LENGTH (mm)	WIDTH (mm)	HEIGHT (mm)	WEIGHT (kg)	WLL* (kg)
EA019AD-02000	2200	2380	880	960	2000

*Working Load Limit

PARTS DIAGRAM

EXCAVATOR BUCKET BOX

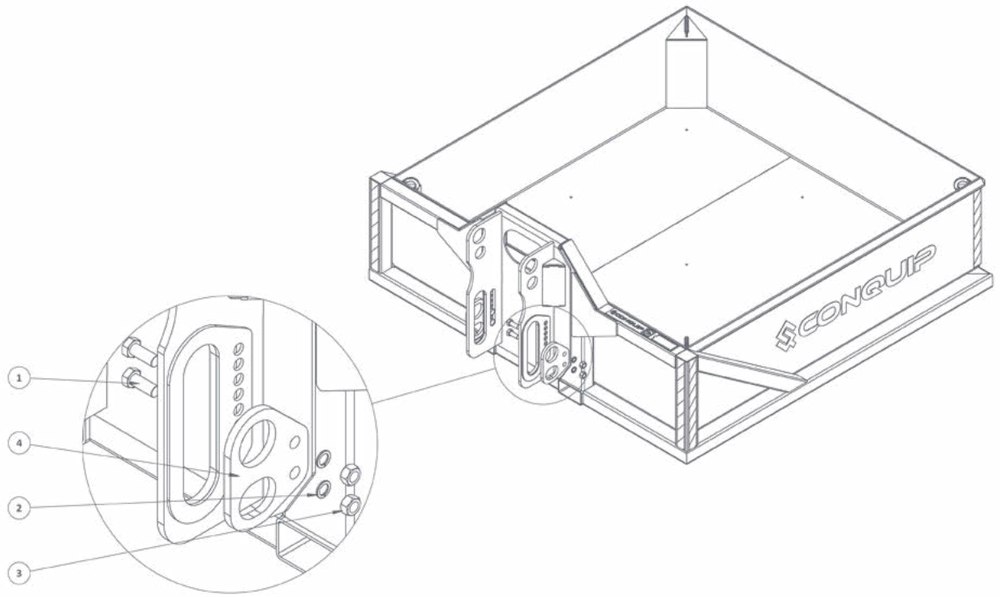

ITEM NUMBER	PART	DESCRIPTION	QUANTITY
1	ZZ130137	Adjustment Plate for Type 2 Hitch	1
2	Hex Head Bolt	M20x50 Hex Head Bolt 8.8	4
3	Full Nut	M20 Full Nut	4
4	Washer	M20 Spring Washer	4

NOTE: These parts are for this model, they may differ for previous versions. Please contact Conquip with any queries.

INTENDED USE

LIFTING AND CARRYING

Excavators are primarily intended for the excavation and handling of loose materials and are not designed for lifting or suspending loads. The employment of excavators fitted with attachments for lifting operations, where such use is outside of standard earth-moving activities, must be properly planned, adequately supervised, and executed safely in strict compliance with Regulation 8 of the Lifting Operations and Lifting Equipment Regulations 1998 (LOLER), which requires that lifting equipment is used only for its intended purpose, inspected prior to use, and operated by competent personnel.

Furthermore, it is the responsibility of the end-user to ensure that the excavator complies with all applicable safety and design requirements, including:

- Machinery Directive 2006/42/EC, Clause 4.2.2 – requires machinery to be designed to eliminate risks during intended use and reasonably foreseeable misuse, ensuring structural integrity and operational safety when lifting attachments are employed.
- EN 474-1, Clause 4.12 – specifies requirements for stability, structural strength, and safety systems in earth-moving machinery. Compliance ensures that the excavator can safely accommodate lifting attachments without risk of overturning, structural failure, or loss of control.
- EN 474-5, Clause 4.8 – governs requirements for additional equipment and attachments, including lifting devices, ensuring mechanical compatibility, secure attachment, and safe operation within the machine's operational limits.
- Provision and Use of Work Equipment Regulations 1998 (PUWER), Regulation 4 – requires that work equipment, including attachments, is suitable for its intended task. This ensures that any lifting attachments are appropriately rated and safe for use with the excavator.
- BS 7121-1:2016 (Code of Practice for Safe Use of Cranes and Lifting Equipment), Parts on Mobile Plant Lifting – provides guidance on safe lifting practices using mobile machinery, including risk assessment, lifting planning, and operator competency, reinforcing compliance with LOLER.
- ISO 12100:2010 – Safety of Machinery: General Principles for Design – requires that machinery be designed to eliminate hazards or reduce risks to a minimum. For excavators, this ensures that any lifting operation does not compromise the original machine safety features.

End-users must verify that the excavator and any attachments are fully compliant with these provisions before undertaking any lifting operations, thereby ensuring regulatory compliance and the safety of personnel, equipment, and property.

OPERATIONAL PROCEDURES

IMPORTANT USAGE NOTES

- Ensure this product is compatible with your excavator lifting table before using. (Refer to the manufacturer's user guide.)
- The Excavator Bucket Box can be crane lifted using the four lifting points in each corner of the unit.
- If there is a slinger/signaller, they should not be positioned underneath the load and should remain visible to the driver.
- Operators should allow for any rough or sloping ground when assessing the method of operating.

USING WITH AN EXCAVATOR

- Select relevant size pins to match your machine's quick hitch (hitch suitable for 65mm and 80mm excavator pins).
- Fit front pin to correct sized hole on the Excavator Bucket Box.
- Adjust the position of rear pin to suit the quick hitch - follow the quick hitch operating guidelines and set the pins to the maximum centres for the unit.
- Ensure the quick hitch pins have the retaining bolts and washers and they are correctly fitted.
- Check for debris in the quick hitch locking mechanism and check the fit of the unit on the quick hitch, do not use if not secure.
- When lifting or setting down the Excavator Bucket Box, always ensure the box is on a level surface.
- When travelling with a load, keep it in the lowest practicable position and maintain driver visibility.
- Once the Excavator Bucket Box is no longer needed, move to a suitable storage location, lower to the ground and release from the quick hitch.

MAINTENANCE & INSPECTION

MAINTENANCE REGIME

- It is mandatory that the equipment is thoroughly examined regularly, by a qualified engineer, to ensure compliance with relevant regulations. Conquip recommend carrying out a thorough examination every six months.
- This equipment may incorporate various loose and detachable items including, but not limited to pins, bolt assemblies and adaption plates. Refer to the separate requirements for the safe use of those items.
- When not being used, store the unit in a clean, upright condition and in a safe place where it will be protected from thieves and unauthorised users.
- This equipment must be inspected by the responsible person before each use and then regularly, as determined by your risk assessment or working practice. If you have any concerns about the machinery's condition or suitability, do not use it.

VISUAL INSPECTION CHECKLIST

INSPECTION ITEMS	RESULTS		COMMENTS
	SATISFACTORY	UNSATISFACTORY	
Serial Number			CQ.....
Product Code			
Working Load Limit (kg)			
Conforms to user guide specification			
Lift eyes bent / worn			
Adjuster plate bolts tight			
Excavator pins secured			
General visual inspection of the body			
SIGNATURE			
Name	Position	Qualification	Signature & Date

GENERAL SAFETY INSTRUCTIONS

The machinery should be properly operated and maintained to keep it in a safe, efficient operating condition. Be sure that all fixings and components are free of mud or other matter that might cause issues hazardous to the operator, serviceman, or other personnel or equipment. Report all malfunctions to those responsible for maintenance, and do not operate the equipment until corrected. Normal service or maintenance performed as required can prevent unexpected and unnecessary downtime.

This operations manual describes general inspections, servicing and operation with the normal safety precautions required for normal servicing and operating conditions. It is not a guide, however, for abnormal conditions or situations, and therefore, servicemen and operators must be safety conscious and alert to recognise potential servicing or operating safety hazards at all times, and take necessary precautions to assure safe servicing and operation of the machine.

M002
Refer to instructions manual

M004
Wear eye protection

M008
Wear safety footwear

M009
Wear protective gloves

M010
Wear protective clothing

M014
Wear head protection

M015
Wear high-visibility clothing

GENERAL NOTES

- Read this operations manual and learn the operating characteristics and limitations of the machinery. Know what operating clearances the machine requires.
- Read and understand all the safety signs prior to operation.
- If the safety signs are obstructed by dirt or debris, clean them using mild soap and water prior to operation.
- If the safety signs are damaged or illegible, replace them immediately, prior to operation.
- Be aware of operating hazards that weather changes can create on the job. Know proper procedures to follow when a severe rain or electrical storm strikes.
- Never attempt to operate or work on machinery when not feeling physically fit.
- Never wear loose clothing, rings, watches, heavy gloves etc., that might catch and result in injury.
- Know what safety equipment is required and use it. Such equipment may be: hard hat, safety glasses, reflector type vests, protective gloves and safety footwear.

TERMS & CONDITIONS

CONQUIP ENGINEERING GROUP STANDARD PRODUCT WARRANTY

01. COMMENCEMENT

1.1 This Warranty shall commence on the Commencement Date and shall continue until the earlier of:

(a) the Expiry Date; or

(b) the date on which it may be voided in accordance with clause 4.1(b)

when it shall terminate automatically without notice.

02. DUTY OF GOOD FAITH

2.1 The Purchaser shall in the exercise of its rights under this Warranty and in the compliance with its obligations under this Warranty be subject to and shall in all respects owe and comply with a duty of good faith to the Warrantor.

03. NATURE AND EXTENT OF COVER

3.1 Subject to clause 3.2 the Warrantor agrees and undertakes to the Purchaser that it shall be liable to the Purchaser under and in accordance with the terms of this Warranty in the event that:

(a) prior to the Expiry Date the Purchaser shall notify a Warranty Claim to the Warrantor; and

(b) the Equipment or any relevant part of the Equipment shall have become unusable as the result of defective material or defective workmanship prior to the Expiry Date.

3.2 The Warrantor's obligation under clause 3.1 shall be expressly subject to the provisions of clauses 4, 5 and 6 and conditional upon the Purchaser's compliance in full with the provisions of clause 7.

04. RESTRICTIONS

4.1 The following restrictions apply to this Warranty:

(a) This Warranty is personal to the Purchaser and neither the legal benefit nor legal burden of this warranty may be assigned or novated or otherwise transferred by the Purchaser to any other party. Any purported assignment, novation or transfer shall not be binding upon the Warrantor.

(b) This Warranty shall be void in the event that the Purchaser:

(i) cannot provide authentic and original documentary evidence that the Purchaser has during the period between the Commencement Date and the Expiry Date complied with the Maintenance and Servicing Requirements; and/or

(ii) has, during the period between the Commencement Date and the Expiry Date, exceeded the Purchaser's Usage Cycle Parameters; and/or

(iii) has, during the period between the Commencement Date and the Expiry Date, exceeded the Purchaser's Use Parameters; and/or

(iv) has carried out, or procured the carrying out by any third party of, any repair to the Equipment or any part of the Equipment which is not an Authorised Repair; and/or

(v) has operated the Equipment after having replaced any part of the Equipment with a part which has not been supplied and fitted by the Warrantor; and/or

(vi) has modified the Equipment in any way prior to use.

05. EXCLUSIONS

5.1 The following are excluded from the scope of this Warranty:

(a) Loss of and/ or damage to the Equipment or any part of it resulting from any collision between the Equipment and any other fixed or stationary or mobile object whatsoever, irrespective of whether that collision was or was not caused by the Purchaser; and/or

(b) Loss of and/or damage to any personal property and/or possessions or other equipment not forming part of the Equipment but which is present in or about the Equipment; and/or

(c) loss and/or damage which is covered by any other insurance policy taken out and maintained by the Purchaser or in respect of which the Purchaser has a contractual obligation to do so; and/or

(d) loss and/or damage to the equipment which is consistent with the use by the Purchaser of the Equipment:

(i) in compliance with the Maintenance and Servicing Requirements; and

(ii) in compliance with the Usage Cycle Parameters; and

(iii) in compliance with the Use Parameters; and

(iv) having only carried out Authorised Repairs to the Equipment; and

(v) having all and any replacement parts fitted by the Warrantor; and

(vi) in unmodified form.

06. LIMITATION OF LIABILITY

6.1 The Warrantor's liability to the Purchaser shall be limited as follows:

(a) The Warrantor shall not in any circumstances be liable to the Purchaser for indirect and/or consequential and/or economic loss suffered and/or incurred as the case may be by the Purchaser; and

(b) The Warrantor shall only be liable to the Purchaser for the reasonable and proper costs reasonably and properly incurred by the Purchaser directly in connection with the repair and/or replacement (at the Warrantor's absolute discretion) of the Equipment or any part of the Equipment; and

(c) The Warrantor's liability to the Purchaser shall notwithstanding any other provision of this Warranty, not in any circumstances exceed the Purchase Price of the Equipment.

07. WARRANTY CLAIMS

7.1 The Purchaser shall in respect of any claim against the Warrantor under this Warranty and within 24 hours of the occurrence of the subject matter of the Warranty Claim:

(a) Complete in full and submit to the Warrantor a Warranty Claim in the form annexed to Schedule 4;

(b) Provide date stamped or date identifiable photographs evidencing the claim; and

(c) Make the Equipment or the relevant part of the Equipment available to the Warrantor for inspection within 48 hours of notification of the relevant Warranty Claim.

08. ENTIRE AGREEMENT

8.1 This Warranty constitutes the entire agreement between the parties and supersedes and extinguishes all previous promises, assurances, warranties, representations and understandings between them, whether written or oral, relating to its subject matter.

8.2 Each party agrees that it shall have no remedies in respect of any statement, representation, assurance or warranty (whether made innocently or negligently) that is not set out in this Warranty. Each party agrees that it shall have no claim for innocent or negligent misrepresentation or negligent misstatement based on any statement in this Warranty.

No variation of this Warranty shall be effective unless it is in writing and signed by the parties (or their authorised representatives).

09. WAIVER

No failure or delay by a party to exercise any right or remedy provided under this Warranty or by law shall constitute a waiver of that or any other right or remedy, nor shall it prevent or restrict the further exercise of that or any other right or remedy. No single or partial exercise of such right or remedy shall prevent or restrict the further exercise of that or any other right or remedy.

10. SEVERANCE

10.1 If any provision or part-provision of this Warranty is or becomes invalid, illegal or unenforceable, it shall be deemed deleted, but that shall not affect the validity and enforceability of the rest of this Warranty.

10.2 If any provision or part-provision of this Warranty is deemed deleted under clause 10.1 the parties shall negotiate in good faith to agree a replacement provision that, to the greatest extent possible, achieves the intended commercial result of the original provision.

11. THIRD PARTY RIGHTS

11.1 This Warranty does not give rise to any rights under the Contracts (Rights of Third Parties) Act 1999 to enforce any term of this Warranty.

12. GOVERNING LAW

12.1 This Warranty and any dispute or claim (including non-contractual disputes or claims) arising out of or in connection with it or its subject matter or formation shall be governed by and construed in accordance with the law of England and Wales.

13. JURISDICTION

13.1 Each party irrevocably agrees that the courts of England and Wales shall have exclusive jurisdiction to settle any dispute or claim (including non-contractual disputes or claims) arising out of or in connection with this Warranty or its subject matter or formation.

DESIGN CONFORMITY (EC & UK)

(01) This certificate meets the requirements of the Machinery Directive 2023/42/EC of the European Parliament and Council.

(02) This certificate meets the requirements of the Supply of Machinery (Safety) Regulations 2008.

DETAILS

NAME & ADDRESS OF MANUFACTURER:
Conquip Engineering Group Ltd, Unit 4, Waterbrook Estate, Alton, Hampshire. GU34 2UD

NAME & ADDRESS OF PERSON TO COMPILE TECHNICAL FILE:
Name: Daniel Critchley Address: Conquip Engineering Group, Unit 4, Waterbrook Estate, Alton, Hampshire. GU34 2UD

NAME & ADDRESS OF AUTHORISED REPRESENTATIVE IF ONE HAS BEEN MANDATED BY THE MANUFACTURER:
N/A

NAME, ADDRESS, AND IDENTIFICATION NUMBER OF THE NOTIFIED BODY (01) OR APPROVED BODY (02), WHERE APPLICABLE:
N/A

EQUIPMENT DESCRIPTION

PRODUCT CODE(S)	GENERAL DESCRIPTION	WORKING LOAD LIMIT
EA019AD-02000	Excavator Bucket Box	2000kg

HARMONISED STANDARDS & REGULATIONS

ITEM	CODE	DESCRIPTION
EC DIRECTIVE/ REGULATION	2023/42/EC	Directive 2023/42/EC- new machinery directive
HARMONISED STANDARDS	BS EN ISO 12100:2010	Safety of machinery General principles for design Risk assessment and risk reduction
	BS EN 13155:2020	Crane. Safety. Non-fixed load lifting attachments
OTHER REGULATIONS	LOLER 1998	Lifting Operations and Lifting Equipment Regulations 1998 (LOLER)
	PUWER 1998	Provision and Use of Work Equipment Regulations 1998 (PUWER)

DECLARATION

PLACE OF DECLARATION:
Alton

DATE OF DECLARATION:
February 2026

I declare that the above equipment meets the Essential Health and Safety requirements of the

(01) Machinery Directive 2023/42/EC of the European Parliament and Council.

(02) Supply of Machinery (Safety) Regulations 2008 and Section 6 of the Health and Safety at Work Etc. Act 1974.

NAME:	POSITION:	SIGNATURE:
Daniel Critchley	Managing Director	

TALKING TO US IS EASY

WE'RE HERE TO HELP

Call us on 0333 300 3470
Email us at sales@cqegroup.com
www.cqegroup.com

Copyright © 2026 Conquip Engineering Group. All Rights Reserved.
Excavator Bucket Box - Issue 06