USER GUIDE

POWERBRUSH FORKLIFT SWEEPER

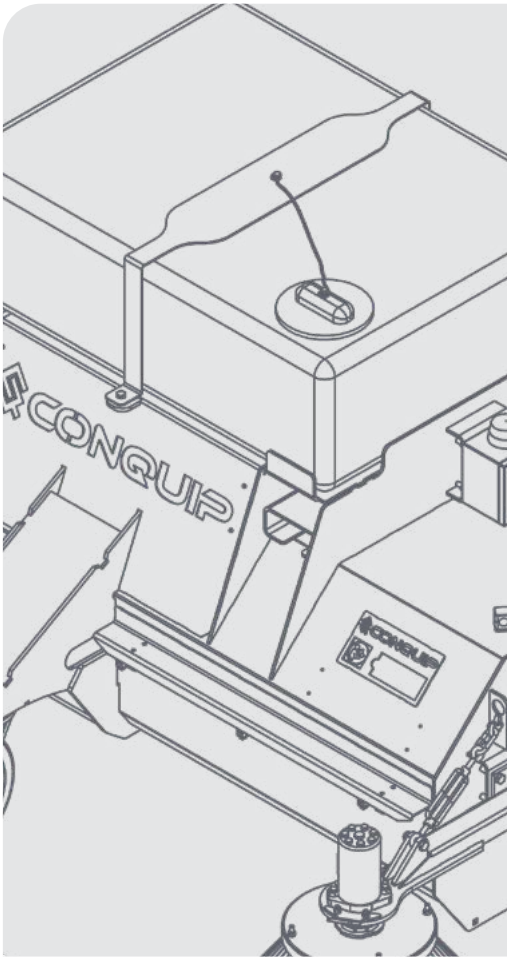

DISCLAIMER

Do not attempt to handle or operate this equipment before you have received sufficient training. Before use, operatives must have carried out all checks featured on the Visual Inspection Sheet on page 23. It is imperative that you have read the General Safety Instructions on page 24 and sufficiently familiarised yourself with the Operational Procedures in this document.

Note that this item is compliant only to the standards specified in this User Guide and it is therefore the duty of the responsible person(s) to review and ensure compliance.

CONTENTS

PRODUCT INFORMATION

INTRODUCTION 04
SPECIFICATION 05
PARTS DIAGRAM 08

INTENDED USE

LIFTING AND CARRYING 14

OPERATIONAL PROCEDURES

IMPORTANT USAGE NOTES 15
KERB BRUSH ASSEMBLY 15
SETTING UP 16
USING THE POWERBRUSH 18
AFTER USE 19
CHARGING THE BATTERY 20
REPLACING THE MAIN BRUSH SECTIONS 21

MAINTENANCE & INSPECTION

MAINTENANCE REGIME 22
VISUAL INSPECTION SHEET 23

GENERAL SAFETY INSTRUCTIONS

SAFETY INSTRUCTIONS 24
GENERAL NOTES 25

LEGAL

TERMS AND CONDITIONS 26
EC DESIGN CONFORMITY 30
STANDARDS AND REGULATIONS APPLICABLE 31

INTRODUCTION

OVERVIEW

The Conquip Powerbrush is a hydraulically powered forklift sweeper that cleans and collects dirt and waste. It features a large 250-litre water tank with two discharge options from the dispenser bar: drip-feed or pressurised spray.

The unit is both durable and inexpensive to maintain and can be customised with an optional kerb brush for cleaning kerbs and gullies.

The Powerbrush is a very cost effective and easy way to keep construction sites clean and safe at all times. It offers total flexibility and is much cheaper than hiring a road sweeper.

KEY BENEFITS

- Available as a standard base unit with drip-fed water or a pressurised water spray system for enhanced dust suppression.
- The seven brush sections can be replaced quickly and their height can be easily adjusted as they wear.
- Simple hydraulic system with a single one-way hydraulic valve, reducing the number of wearing parts.
- Seven grease points for easy maintenance: two on each wheel and one on the main shaft bearing.
- Robust hopper collects dirt and waste and the durable design provides protection from manhole covers.
- Three wheels for maximum stability and the ability to follow uneven ground.
- Compatible with any forklift or telehandler with a double acting auxiliary service.

OPTIONAL EXTRAS

- Kerb brush for cleaning gullies and kerbs.

HYDRAULIC FLOW RATE & PRESSURE

- Hydraulic flow rate: maximum 60 litres per minute continuous, 75 litres per minute intermittent.
- Hydraulic pressure: maximum 175 bar continuous, 190 bar intermittent.
- Maximum pressure drop if flow rate and pressure are high: 135 bar continuous.

SPECIFICATION

THE RANGE

CODE	TYPE	WEIGHT (kg)	TANK CAPACITY (litres)
SA800AK-02100	Standard Drip Feed	560	250
SA800AI-02100	Pressurised Water Spray	560	250
SA800AP-02100	Standard Drip Feed + Kerb Brush	585	250
SA800AQ-02100	Pressurised Water Spray + Kerb Brush	585	250

SPECIFICATION

STANDARD UNIT

ITEM	PRODUCT CODE
Standard Drip Feed	SA800AK-02100
Pressurised Water Spray	SA800AI-02100

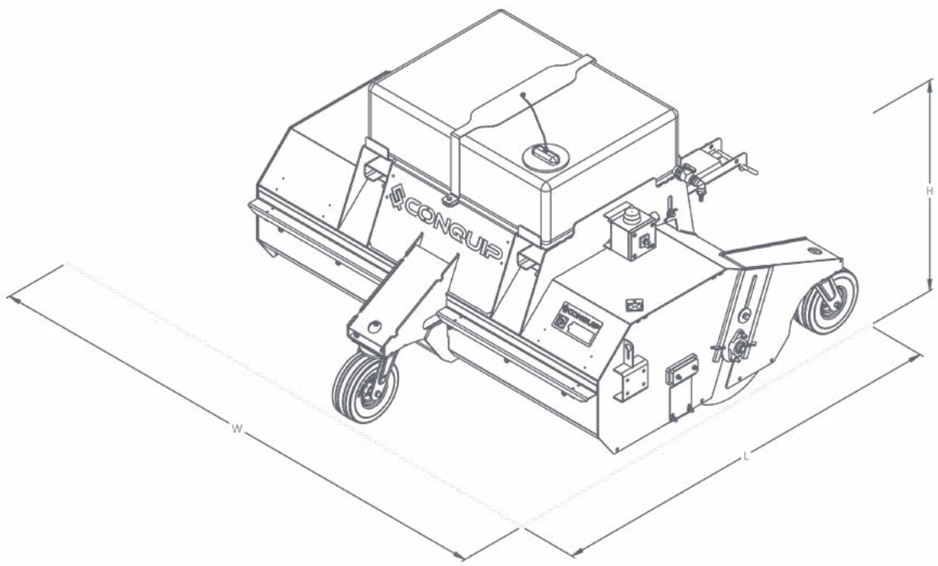

LENGTH (mm)	WIDTH (mm)	HEIGHT (mm)	FORK POCKETS (mm)
2180	2340	1260	148 x 60
2180	2340	1260	148 x 60

SPECIFICATION

WITH KERB BRUSH

ITEM	PRODUCT CODE
Standard Drip Feed + Kerb Brush	SA800AP-02100
Pressurised Water Spray + Kerb Brush	SA800AQ-02100

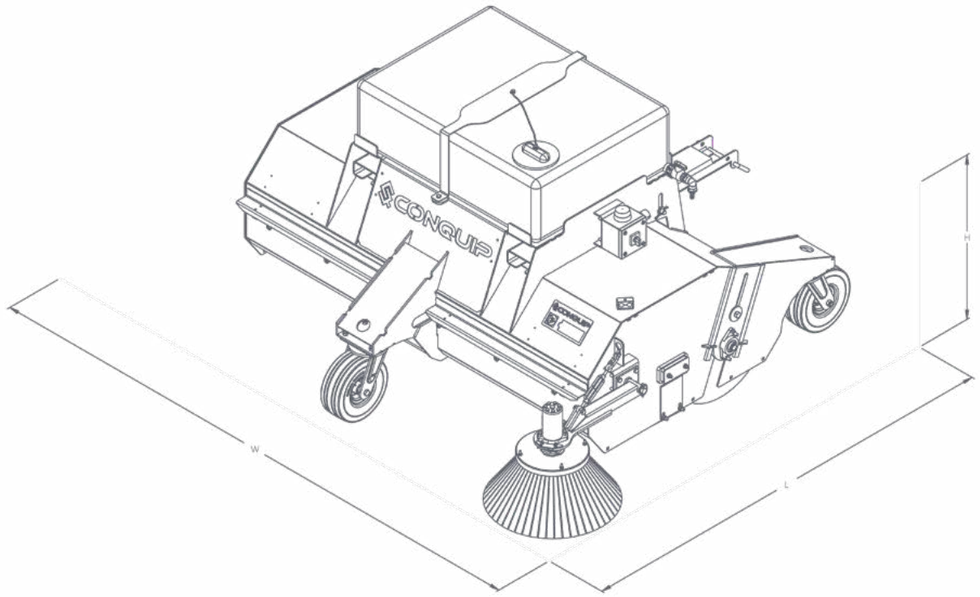

LENGTH (mm)	WIDTH (mm)	HEIGHT (mm)	FORK POCKETS (mm)
2300	2700	1260	148 x 60
2300	2700	1260	148 x 60

PARTS DIAGRAM

POWERBRUSH FORKLIFT SWEEPER

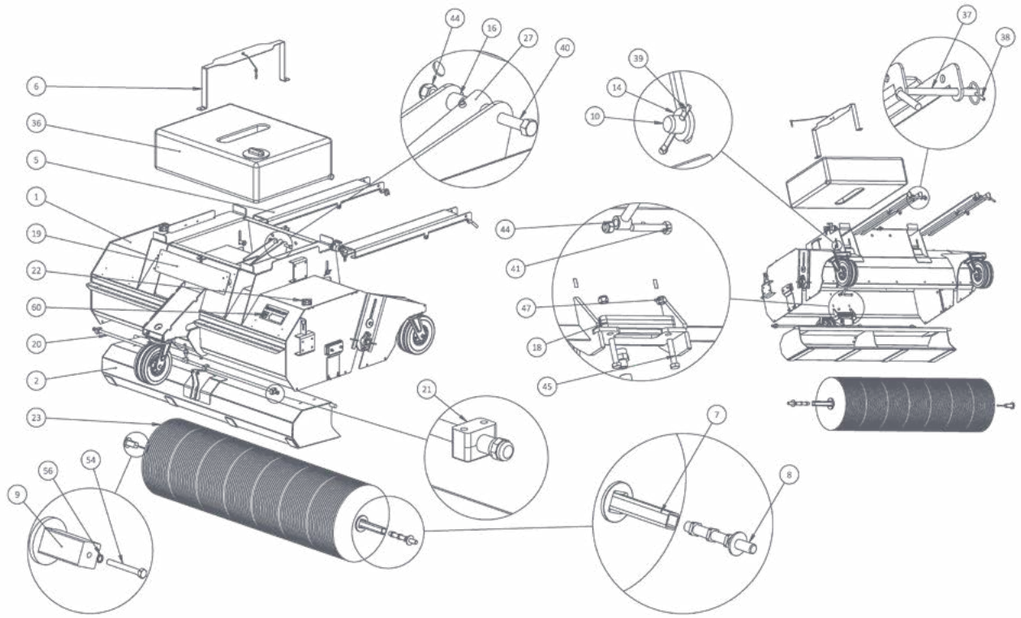

NOTE: These parts are for this model, they may differ for previous versions. Please contact Conquip with any queries.

PRODUCT INFORMATION

PARTS DIAGRAM

POWERBRUSH FORKLIFT SWEEPER

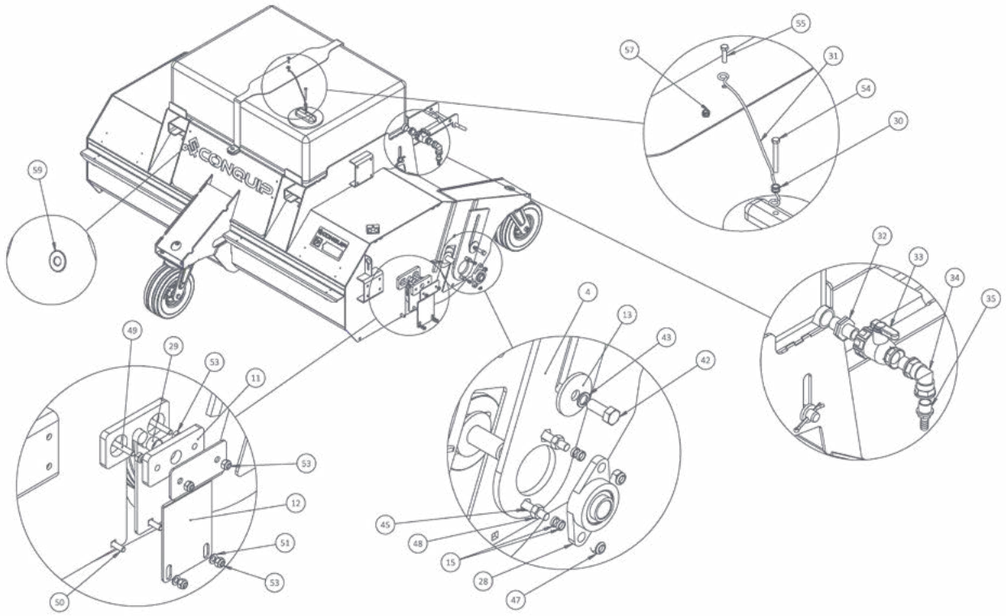

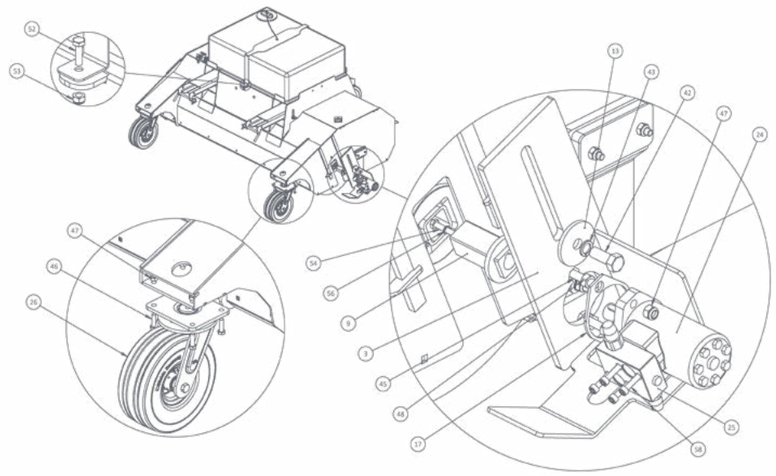

NOTE: These parts are for this model, they may differ for previous versions. Please contact Conquip with any queries.

PARTS LIST

POWERBRUSH FORKLIFT SWEEPER

ITEM NUMBER	DESCRIPTION	QUANTITY
1	Sweeper Main Body Assembly	1
2	Sweeper Hopper Assembly	1
3	Brush Adjustment Assembly (Motor side)	1
4	Brush Adjustment Assembly (Bearing side)	1
5	Floating Fork Pocket	2
6	Water Tank Strap	1
7	Main Brush Shaft	1
8	Shaft Bearing Insert Assembly	1
9	Square Key Hole Hub Assembly	1
10	Fork Pocket Retaining Pins	2
11	Hopper Bearing Bracket	2
12	Hopper Safety Guard	2
13	Washer	2
14	Washer	2
15	Washer	4
16	Spacer	2
17	Motor Space Washer	1
18	Hopper Stop	1
19	Sweeper White Backing Plate	1
20	Sweeper Spray Bar, Gravity	1
21	Hydraulic Single Hose Clamp	4
22	Hydraulic Double Hose Clamp	2
23	Sweeper Brush	7
24	Sweeper Brush Motor	1
25	Duel Relief Valve	1
26	Swivel Castor	3
27	Hydraulic Ram	1
28	Flanged Bearing	1
29	Sleeve Bearing	2
30	Bolt Tie Guide	1

NOTE: These parts are for this model, they may differ for previous versions. Please contact Conquip with any queries.

PARTS LIST

POWERBRUSH FORKLIFT SWEEPER

ITEM NUMBER	DESCRIPTION	QUANTITY
31	Restraint Wire	1
32	Hex Nipple Adaptor	1
33	Water Tap	1
34	Elbow 90 degrees	1
35	Hosetail	1
36	Water Tank 250 litres	1
37	16mm Heel Pin	2
38	Linch Pin 6mm	2
39	Split Cotter Pin 6mm	2
40	Hex Head Bolt	1
41	Hex Head Bolt	1
42	Hex Head Bolt	2
43	Spring Washer	2
44	Nyloc Nut	2
45	Hex Head Bolt	6
46	Hex Head Bolt	12
47	Nyloc Nut	18
48	Full Nut	4
49	Coach Bolt	4
50	Coach Bolt	4
51	Flat Washer	6
52	Hex Head Bolt	2
53	Nyloc Nut	14
54	Hex Head Bolt	2
55	Hex Head Bolt	1
56	Spring Washer	1
57	Nyloc Nut	2
58	Socket Cap Screw	4
59	Pop Rivet	4
60	Read Working Instructions Sticker	1

NOTE: These parts are for this model, they may differ for previous versions. Please contact Conquip with any queries.

PARTS DIAGRAM

KERB BRUSH & HYDRAULICS

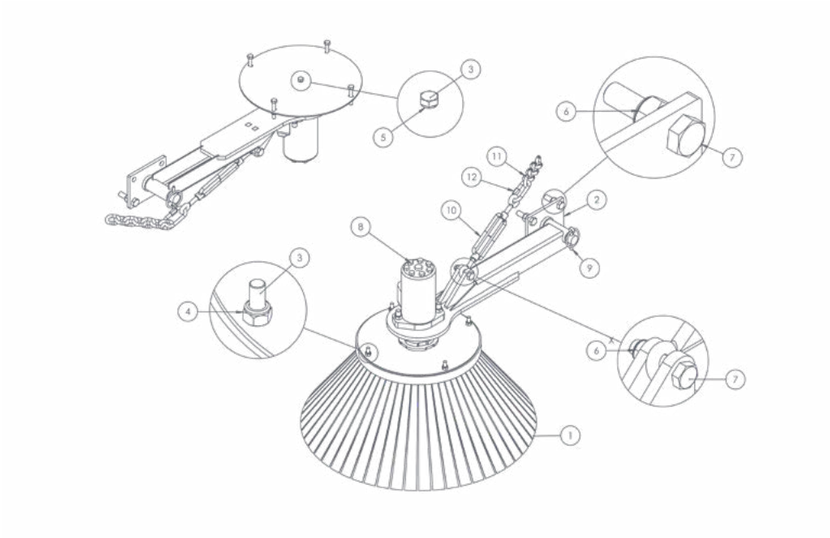

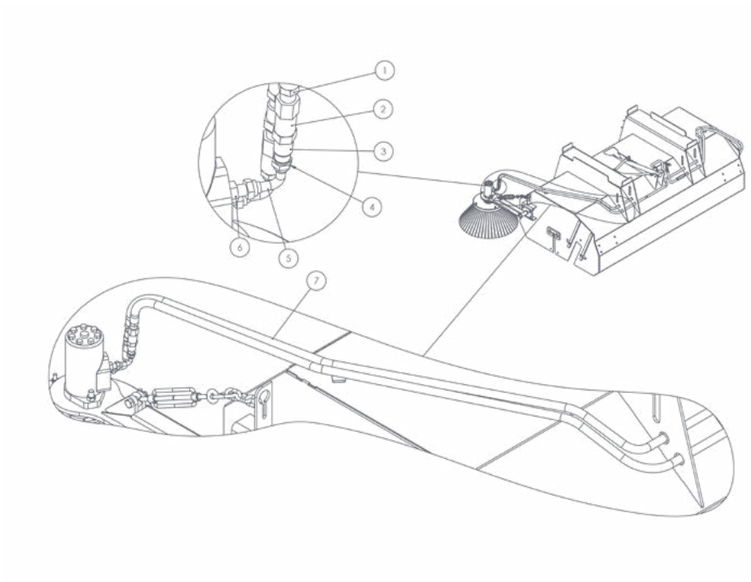

NOTE: These parts are for this model, they may differ for previous versions. Please contact Conquip with any queries.

PARTS LIST

KERB BRUSH

ITEM NUMBER	DESCRIPTION	QUANTITY
1	Poly Kerb Brush, 4 Fixing Bolts	1
2	Kerb Brush Bracket	1
3	M8 x 50 HT Hex Bolt BZP	5
4	M8 Nylon Inset Nut BZP	4
5	M8 Spring Washer	1
6	M12 Nylon Inset Nut BZP	4
7	M12 x 50 8.8 HT BZP Hex Set Screws	7
8	Hydraulic Motor AGMR 160	1
9	Linch Pin 6mm x 42mm	1
10	Chain Adjuster	1
11	Chain, Galvanised, 8mm x 52mm x 32mm	4
12	Quick Link, 8mm	1

KERB BRUSH HYDRAULICS

ITEM NUMBER	DESCRIPTION	QUANTITY
1	Male-Male Adaptor ⅜" X ⅜" BSP	3
2	½" Flat Face Female Quick Release Coupling	2
3	½" Flat Face Male Quick Release Coupling	2
4	Rubber Bonded Seal ½" (Dowty Washer)	4
5	Male-Female Adaptor Swept 90° 1/2" x 1/2" BSP	2
6	Male-Male Adaptor, 1/2" X 1/2" BSP	2
7	Hydraulic Hose, 3/8" Ø, 200mm, Ends: 3/8" F / 1/2" F	2

INTENDED USE

LIFTING AND CARRYING

Forklifts and Telehandlers are designed to lift and carry loads. When used with an attachment, the deration chart must be adhered to.

Underslung loads may be subject to specific safety precautions including risk assessments and operator training.

OPERATIONAL PROCEDURES

IMPORTANT USAGE NOTES

- The Powerbrush is supplied with heel pins that must be fitted correctly before use. If the heel pins are missing, do not use the equipment or fit alternatives - contact Conquip Engineering Group for a replacement.
- Drain the water tank in cold weather to prevent freezing.
- Keep the hydraulic hoses safely off the ground to avoid them getting damaged.
- DO NOT disconnect the hydraulic hoses unless the pressure from the auxiliary service has been released.
- Never allow brick banding, barbed wire or any straps to be picked up by the Powerbrush.
- Always ensure the hydraulic system is in operation before use.
- DO NOT drive directly over fixed objects, such as manholes.
- Close the hopper fully when not using the Powerbrush to avoid pressure building up.
- Only compatible with forklifts or telehandlers with a double acting auxiliary service.
- 18 AH battery takes approximately 6 hours 45 mins to charge from flat.

KERB BRUSH ASSEMBLY INSTRUCTIONS

01. Bolt on the Kerb Brush Pin Bracket (ZZ220054) to the Powerbrush, using the four M12 x 50mm bolts provided.
02. Slide the gulley brush arm onto the pin.
03. Insert the linch pin to secure the arm to the bracket.
04. Pass the chain through the anchor point to a position where the bristle of the kerb brush is just off the floor.
05. Use the turn buckle for fine adjustment to a point where the front bristles are just touching the floor with a small amount of deflection.

SETTING UP THE POWERBRUSH

01. To connect the Powerbrush to your forklift, set the machine's forks to the correct width for the Powerbrush fork pockets. Make sure that they are equidistant from the centre.

02. Drive the forklift/ telehandler to the Powerbrush. Align the forks with the Powerbrush fork pockets and fully insert the forks.

03. Fit the fork retaining pins behind the heel of the forks to secure the Powerbrush to the machine.

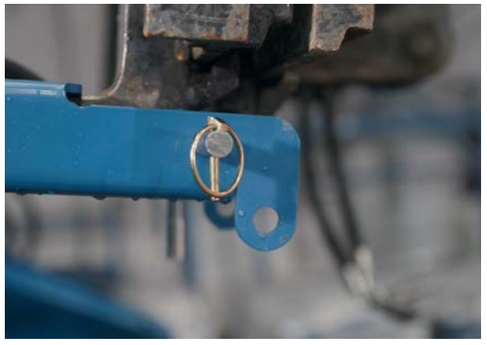

04. Apply the park brake and switch off the forklift engine.

05. Release any pressure in the auxiliary hydraulic line of the machine by operating the control lever.

06. Detach the main hose couplings on the Powerbrush and connect them to the two outputs on the machine. The quick release female on the Powerbrush connects to the male on the machine and the male to the female.

07. Check that the main brush is rotating and the hopper is opening and closing fully.

08. Ensure that the main brush is adjusted correctly. Always set up the Powerbrush on a level surface. The bristles should be touching the ground very slightly with a small deflection where they meet the floor.

09. To adjust the brush, undo bolt 'A' on one side of the brush (see diagram) and apply a small amount of pressure to push the brush to the ground. Re-tighten the bolt. Repeat this procedure to the other side of the brush.

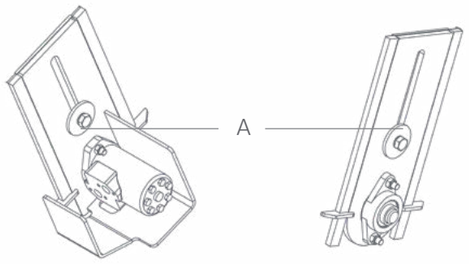

10. The Powerbrush is now ready for use.

NOTE: Configuration may differ on different forklift makes and models.

USING THE POWERBRUSH

01. Open the water tap to allow water to dribble evenly from the dispenser bar at the front of the Powerbrush.
02. For the pressurised water spray model, turn the electric swtich on.

03. Lower the brush to the floor.
04. Ensure that the floating forks are centralised and the forks are level.
05. Activate the brush by operating the hydraulic circuit of the forklift or telehandler.
06. Drive forward at a suitable speed to achieve the desired sweep results.

07. Once the hopper is full, lift the Powerbrush to a suitable location and reverse the flow of the hydraulic circuit to empty the hopper.

AFTER USE

01. To remove the Powerbrush from a forklift or telehandler, first park in a suitable place away from site traffic but somewhere that is easily accessible when the unit is required again.
02. Apply the park brake and switch off the forklift engine.
03. Operate the auxiliary control lever, without the engine running, to release the pressure and close the hopper. Closing the hopper will prevent a build-up in the hydraulic hoses.
04. Exit the machine cab to follow the next steps.
05. Turn the water tap to the 'off' position. If using the pressurised water spray, make sure the power supply switch is turned off so that the orange beacon is no longer flashing.
    In freezing conditions, remove the water hose and drain the tank.

06. Remove the hydraulic hoses from the two outputs on the arm of the machine. CAUTION: Use gloves as the connections will be hot due to hydraulic oil passing through the hoses.
07. Remove the fork retaining pins and refit them into their storage holes.
08. Return to the machine's cab to detach the Powerbrush from the forklift or telehandler.
09. Slowly reverse the forklift or telehandler to remove the forks from the fork pockets.

10. Conquip advise lubricating the grease points after use, as demonstrated in our 'How to use the Powerbrush' video. Scan the QR code at the top of this page to watch.
11. Recharge the battery, if applicable.

CHARGING THE BATTERY

If using the pressurised water spray model, Conquip advises recharging the battery after every use.

01. To charge the battery, ensure the Powerbrush is positioned in the designated charging area or near a suitable power source.
02. The Powerbrush requires a 110V 16 amp power supply.
03. If this power supply is not available on-site, a 240V to 110V 16 amp transformer will be required.
04. Insert a 110V 16 amp power cable into the grey control box on the side of the Powerbrush.

05. Ensure the mains power is on.
06. The Powerbrush will automatically begin charging once power has been supplied.
07. The 18 AH battery takes approximately 6 hours 45 mins to charge from flat.
08. After charging and before moving the Powerbrush, turn off the power supply and remove the 110V 16 amp cable from the control box on the unit.
09. The Powerbrush is ready to use again.

REPLACING THE MAIN BRUSH SECTIONS

01. Remove the bolt and washer from the top plate fixing on both sides of the Powerbrush body, and detach the hydraulic hoses.
02. With the top plate fixings now removed on both sides, lift the Powerbrush with the forklift and open the hopper. The brush, along with any motor and bearing shaft assemblies attached, will now slide down the plate guide and detach itself from the Powerbrush body.

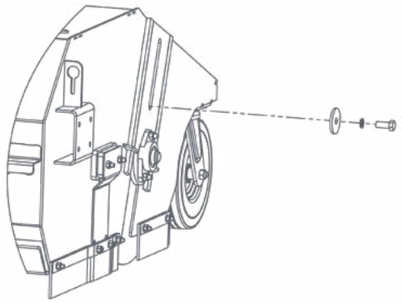

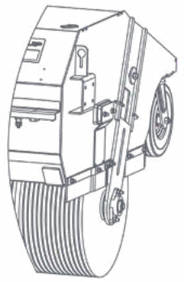

03. Once the main brush is fully detached from the Powerbrush body, remove the motor and bearing shaft assemblies as shown below. After the assemblies are removed, the brush sections can be removed from the central drive shaft.

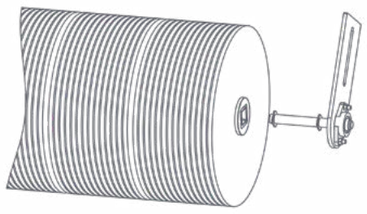

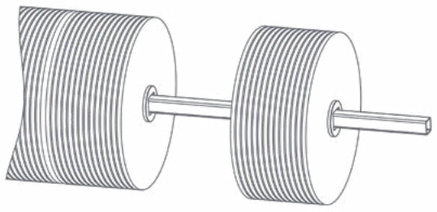

04. Replace the brush sections and refit the motor and bearing shaft assemblies, realigning them with the plate guide.
05. Lower the Powerbrush on the forklift, checking the alignment of the motor and bearing shaft assemblies.
06. Once the Powerbrush is on the ground, the motor and bearing shaft assembly plates should now align with the adjuster bolt hole. Refit the aduster bolt and torque to 180Nm.

MAINTENANCE & INSPECTION

MAINTENANCE REGIME

- It is mandatory that the equipment is thoroughly examined regularly, by a qualified engineer, to ensure compliance with relevant regulations. Conquip recommend carrying out a thorough examination every six months.
- This equipment may incorporate various loose and detachable items including, but not limited to pins, bolt assemblies and adaption plates. Refer to the separate requirements for the safe use of those items.
- When not being used, store the unit in a clean, upright condition and in a safe place where it will be protected from thieves and unauthorised users.
- This equipment must be inspected by the responsible person before each use and then regularly, as determined by your risk assessment or working practice. If you have any concerns about the equipment's condition or suitability, do not use it.

VISUAL INSPECTION CHECKLIST

INSPECTION ITEMS	RESULTS		COMMENTS
	SATISFACTORY	UNSATISFACTORY	
Serial Number			CQ.....
Product Code			
Working Load Limit (kg)			
Conforms to user guide specification			
Check heel pins for damage			
Check heel pin retaining clips in place			
Check castor wheels condition			
Check the seven grease points lubricated			
Check main brush adjusted correctly			
Check for hydraulic leaks			
Check water system operational			
Check brush adjuster bolts are tight			
General visual body inspection			
SIGNATURE			
Name	Position	Qualification	Signature & Date

GENERAL SAFETY INSTRUCTIONS

The equipment should be properly operated and maintained to keep it in a safe, efficient operating condition. Be sure that all fixings and components are free of mud or other matter that might cause issues hazardous to the operator, serviceman, or other personnel or equipment. Report all malfunctions to those responsible for maintenance, and do not operate the equipment until corrected. Normal service or maintenance performed as required can prevent unexpected and unnecessary downtime.

This operations manual describes general inspections, servicing and operation with the normal safety precautions required for normal servicing and operating conditions. It is not a guide, however, for abnormal conditions or situations, and therefore, servicemen and operators must be safety conscious and alert to recognise potential servicing or operating safety hazards at all times, and take necessary precautions to assure safe servicing and operation of the equipment.

M002
Refer to instructions manual

M004
Wear eye protection

M008
Wear safety footwear

M009
Wear protective gloves

M010
Wear protective clothing

M014
Wear head protection

M015
Wear high-visibility clothing

GENERAL NOTES

- Read this operations manual and learn the operating characteristics and limitations of the equipment. Know what operating clearances the machine requires.
- Read and understand all the safety signs prior to operation.
- If the safety signs are obstructed by dirt or debris, clean them using mild soap and water prior to operation.
- If the safety signs are damaged or illegible, replace them immediately, prior to operation.
- Be aware of operating hazards that weather changes can create on the job. Know proper procedures to follow when a severe rain or electrical storm strikes.
- Never attempt to operate or work on machinery when not feeling physically fit.
- Never wear loose clothing, rings, watches, heavy gloves etc., that might catch and result in injury.
- Know what safety equipment is required and use it. Such equipment may be: hard hat, safety glasses, reflector type vests, protective gloves and safety footwear.

TERMS & CONDITIONS

CONQUIP ENGINEERING GROUP STANDARD PRODUCT WARRANTY

01. COMMENCEMENT

1.1 This Warranty shall commence on the Commencement Date and shall continue until the earlier of:

(a) the Expiry Date; or

(b) the date on which it may be voided in accordance with clause 4.1(b)

when it shall terminate automatically without notice.

02. DUTY OF GOOD FAITH

2.1 The Purchaser shall in the exercise of its rights under this Warranty and in the compliance with its obligations under this Warranty be subject to and shall in all respects owe and comply with a duty of good faith to the Warrantor.

03. NATURE AND EXTENT OF COVER

3.1 Subject to clause 3.2 the Warrantor agrees and undertakes to the Purchaser that it shall be liable to the Purchaser under and in accordance with the terms of this Warranty in the event that:

(a) prior to the Expiry Date the Purchaser shall notify a Warranty Claim to the Warrantor; and

(b) the Equipment or any relevant part of the Equipment shall have become unusable as the result of defective material or defective workmanship prior to the Expiry Date.

3.2 The Warrantor's obligation under clause 3.1 shall be expressly subject to the provisions of clauses 4, 5 and 6 and conditional upon the Purchaser's compliance in full with the provisions of clause 7.

04. RESTRICTIONS

4.1 The following restrictions apply to this Warranty:

(a) This Warranty is personal to the Purchaser and neither the legal benefit nor legal burden of this warranty may be assigned or novated or otherwise transferred by the Purchaser to any other party. Any purported assignment, novation or transfer shall not be binding upon the Warrantor.

(b) This Warranty shall be void in the event that the Purchaser:

(i) cannot provide authentic and original documentary evidence that the Purchaser has during the period between the Commencement Date and the Expiry Date complied with the Maintenance and Servicing Requirements; and/or

(ii) has, during the period between the Commencement Date and the Expiry Date, exceeded the Purchaser's Usage Cycle Parameters; and/or

(iii) has, during the period between the Commencement Date and the Expiry Date, exceeded the Purchaser's Use Parameters; and/or

(iv) has carried out, or procured the carrying out by any third party of, any repair to the Equipment or any part of the Equipment which is not an Authorised Repair; and/or

(v) has operated the Equipment after having replaced any part of the Equipment with a part which has not been supplied and fitted by the Warrantor; and/or

(vi) has modified the Equipment in any way prior to use.

05. EXCLUSIONS

5.1 The following are excluded from the scope of this Warranty:

(a) Loss of and/ or damage to the Equipment or any part of it resulting from any collision between the Equipment and any other fixed or stationary or mobile object whatsoever, irrespective of whether that collision was or was not caused by the Purchaser; and/or

(b) Loss of and/or damage to any personal property and/or possessions or other equipment not forming part of the Equipment but which is present in or about the Equipment; and/or

(c) loss and/or damage which is covered by any other insurance policy taken out and maintained by the Purchaser or in respect of which the Purchaser has a contractual obligation to do so; and/or

(d) loss and/or damage to the equipment which is consistent with the use by the Purchaser of the Equipment:

(i) in compliance with the Maintenance and Servicing Requirements; and

(ii) in compliance with the Usage Cycle Parameters; and

(iii) in compliance with the Use Parameters; and

(iv) having only carried out Authorised Repairs to the Equipment; and

(v) having all and any replacement parts fitted by the Warrantor; and

(vi) in unmodified form.

06. LIMITATION OF LIABILITY

6.1 The Warrantor's liability to the Purchaser shall be limited as follows:

(a) The Warrantor shall not in any circumstances be liable to the Purchaser for indirect and/or consequential and/or economic loss suffered and/or incurred as the case may be by the Purchaser; and

(b) The Warrantor shall only be liable to the Purchaser for the reasonable and proper costs reasonably and properly incurred by the Purchaser directly in connection with the repair and/or replacement (at the Warrantor's absolute discretion) of the Equipment or any part of the Equipment; and

(c) The Warrantor's liability to the Purchaser shall notwithstanding any other provision of this Warranty, not in any circumstances exceed the Purchase Price of the Equipment.

07. WARRANTY CLAIMS

7.1 The Purchaser shall in respect of any claim against the Warrantor under this Warranty and within 24 hours of the occurrence of the subject matter of the Warranty Claim:

(a) Complete in full and submit to the Warrantor a Warranty Claim in the form annexed to Schedule 4;

(b) Provide date stamped or date identifiable photographs evidencing the claim; and

(c) Make the Equipment or the relevant part of the Equipment available to the Warrantor for inspection within 48 hours of notification of the relevant Warranty Claim.

08. ENTIRE AGREEMENT

8.1 This Warranty constitutes the entire agreement between the parties and supersedes and extinguishes all previous promises, assurances, warranties, representations and understandings between them, whether written or oral, relating to its subject matter.

8.2 Each party agrees that it shall have no remedies in respect of any statement, representation, assurance or warranty (whether made innocently or negligently) that is not set out in this Warranty. Each party agrees that it shall have no claim for innocent or negligent misrepresentation or negligent misstatement based on any statement in this Warranty.

No variation of this Warranty shall be effective unless it is in writing and signed by the parties (or their authorised representatives).

09. WAIVER

No failure or delay by a party to exercise any right or remedy provided under this Warranty or by law shall constitute a waiver of that or any other right or remedy, nor shall it prevent or restrict the further exercise of that or any other right or remedy. No single or partial exercise of such right or remedy shall prevent or restrict the further exercise of that or any other right or remedy.

10. SEVERANCE

10.1 If any provision or part-provision of this Warranty is or becomes invalid, illegal or unenforceable, it shall be deemed deleted, but that shall not affect the validity and enforceability of the rest of this Warranty.

10.2 If any provision or part-provision of this Warranty is deemed deleted under clause 10.1 the parties shall negotiate in good faith to agree a replacement provision that, to the greatest extent possible, achieves the intended commercial result of the original provision.

11. THIRD PARTY RIGHTS

11.1 This Warranty does not give rise to any rights under the Contracts (Rights of Third Parties) Act 1999 to enforce any term of this Warranty.

12. GOVERNING LAW

12.1 This Warranty and any dispute or claim (including non-contractual disputes or claims) arising out of or in connection with it or its subject matter or formation shall be governed by and construed in accordance with the law of England and Wales.

13. JURISDICTION

13.1 Each party irrevocably agrees that the courts of England and Wales shall have exclusive jurisdiction to settle any dispute or claim (including non-contractual disputes or claims) arising out of or in connection with this Warranty or its subject matter or formation.

DESIGN CONFORMITY (EC & UK)

(01) This certificate meets the requirements of the Machinery Directive 2023/42/EC of the European Parliament and Council.

(02) This certificate meets the requirements of the Supply of Machinery (Safety) Regulations 2008.

DETAILS

NAME & ADDRESS OF MANUFACTURER:
Conquip Engineering Group Ltd, Unit 4, Waterbrook Estate, Alton, Hampshire. GU34 2UD

NAME & ADDRESS OF PERSON TO COMPILE TECHNICAL FILE:
Name: Daniel Critchley Address: Conquip Engineering Group, Unit 4, Waterbrook Estate, Alton, Hampshire. GU34 2UD

NAME & ADDRESS OF AUTHORISED REPRESENTATIVE IF ONE HAS BEEN MANDATED BY THE MANUFACTURER:
N/A

NAME, ADDRESS, AND IDENTIFICATION NUMBER OF THE NOTIFIED BODY (01) OR APPROVED BODY (02), WHERE APPLICABLE:
N/A

EQUIPMENT DESCRIPTION

PRODUCT CODE(S)	GENERAL DESCRIPTION	WORKING LOAD LIMIT
SA800AK-02100	Standard Drip Feed	N/A
SA800AI-02100	Pressurised Water Spray	N/A
SA800AP-02100	Standard Drip Feed + Kerb Brush	N/A
SA800AQ-02100	Pressurised Water Spray + Kerb Brush	N/A

HARMONISED STANDARDS & REGULATIONS

ITEM	CODE	DESCRIPTION
EC DIRECTIVE/ REGULATION	2023/42/EC	Directive 2023/42/EC- new machinery directive
HARMONISED STANDARDS	BS EN ISO 12100:2010	Safety of machinery General principles for design Risk assessment and risk reduction
OTHER REGULATIONS	LOLER 1998	Lifting Operations and Lifting Equipment Regulations 1998 (LOLER)
	PUWER 1998	Provision and Use of Work Equipment Regulations 1998 (PUWER)

DECLARATION

PLACE OF DECLARATION:
Alton

DATE OF DECLARATION:
February 2026

I declare that the above equipment meets the Essential Health and Safety requirements of the

(01) Machinery Directive 2023/42/EC of the European Parliament and Council.

(02) Supply of Machinery (Safety) Regulations 2008 and Section 6 of the Health and Safety at Work Etc. Act 1974.

NAME:	POSITION:	SIGNATURE:
Daniel Critchley	Managing Director	

TALKING TO US IS EASY

WE'RE HERE TO HELP

Call us on 0333 300 3470
Email us at sales@cqegroup.com
www.cqegroup.com

Copyright © 2026 Conquip Engineering Group. All Rights Reserved.
Powerbrush Forklift Sweeper User Guide- Issue 09